XM-2200GTX

SERVICE MANUAL

Ver. 1.3 2005. 05

US Model
Canadian Model
AEP Model
UK Model
E Model

SPECIFICATIONS

AUDIO POWER SPECIFICATIONS (US MODEL)
POWER OUTPUT AND TOTAL HARMONIC DISTORTION
200 watts per channel minimum continuous average power into 4 ohms, both channels driven from 20 Hz to 20 kHz with no more than 0.1% total harmonic distortion per Car Audio Ad Hoc Committee standards.

Other Specifications

Circuit system	OTL (output transformerless) circuit Pulse power supply
Inputs	RCA pin jacks High level input connector
Outputs	Speaker terminals Through out pin jacks
Suitable speaker impedance	2 – 8 Ω (stereo) 4 – 8 Ω (when used as a bridging amplifier)
Maximum outputs	400 W × 2 (at 4 Ω) 600 W × 2 (at 2 Ω) 1,200 W (monaural) at 4 Ω
Rated outputs (supply voltage at 14.4 V)	200 W × 2 (20 Hz – 20 kHz, 0.1% THD, at 4 Ω) 250 W × 2 (20 Hz – 20 kHz, 0.15% THD, at 2 Ω) 500 W (monaural) (20 Hz – 20 kHz, 0.15% THD, at 4 Ω)
Frequency response	5 Hz – 50 kHz ($^{+0}_{-3}$ dB)
Input level adjustment range	0.3 – 6.0 V (RCA pin jacks) 1.2 – 12.0 V (High level input)
Low-pass filter	50 – 300 Hz, –12 dB/oct
Low boost	0 – 10 dB (40 Hz)
Power requirements	12 V DC car battery (negative ground)
Power supply voltage	10.5 – 16 V
Current drain	at rated output : 48 A (at 4 Ω) Remote input : 1 mA
Dimensions	Approx. 400 × 55 × 276 mm (15 3/4 × 2 1/4 × 10 7/8 in.) (w/h/d) not incl. projecting parts and controls
Mass	Approx. 4.6 kg (10 lb. 6 oz.) not incl. accessories
Supplied accessories	Mounting screws (4) High level input cord (1) Protection cap (1)

Design and specifications are subject to change without notice.

STEREO POWER AMPLIFIER

9-961-370-04 **Sony Corporation**
2005E04-1 **e Vehicle Group**
© 2005. 05
Published by Sony Engineering Corporation

SONY®

Note for Replacement of FET

Change the both channels of FETs at the output stage.
If one or both parts in the following combination is broken, the service kit should be ordered.

	Service kit part No.
Q108, 110, 112	X-3383-027-1
Q208, 210, 212	
Q109, 111, 113	X-3383-028-1
Q209, 211, 213	

Notes on Chip Component Replacement

- Never reuse a disconnected chip component.
- Notice that the minus side of a tantalum capacitor may be damaged by heat.

SAFETY-RELATED COMPONENT WARNING!!

COMPONENTS IDENTIFIED BY MARK ⚠ OR DOTTED LINE WITH MARK ⚠ ON THE SCHEMATIC DIAGRAMS AND IN THE PARTS LIST ARE CRITICAL TO SAFE OPERATION. REPLACE THESE COMPONENTS WITH SONY PARTS WHOSE PART NUMBERS APPEAR AS SHOWN IN THIS MANUAL OR IN SUPPLEMENTS PUBLISHED BY SONY.

ATTENTION AU COMPOSANT AYANT RAPPORT À LA SÉCURITÉ!!

LES COMPOSANTS IDENTIFIÉS PAR UNE MARQUE ⚠ SUR LES DIAGRAMMES SCHÉMATIQUES ET LA LISTE DES PIÈCES SONT CRITIQUES POUR LA SÉCURITÉ DE FONCTIONNEMENT. NE REMPLACER CES COMPOSANTS QUE PAR DES PIÈCES SONY DONT LES NUMÉROS SONT DONNÉS DANS CE MANUEL OU DANS LES SUPPLÉMENTS PUBLIÉS PAR SONY.

TABLE OF CONTENTS

1. GENERAL
Location and Function of Controls 3
Connections 3

2. DISASSEMBLY
2-1. Bottom Plate 7
2-2. Main Board Section 8
2-3. Main Board 8
2-4. Led Board 9

3. ELECTRICAL ADJUSTMENT 10

4. DIAGRAMS
4-1. Block Diagram 11
4-2. Schematic Diagram –Main Section (1/2)– 12
4-3. Schematic Diagram –Main Section (2/2)– 13
4-4. Printed Wiring Boards –Main Section– 14

5. EXPLODED VIEWS
5-1. Heat Sink (Main) Section 16
5-2. Main Board Section 17

6. ELECTRICAL PARTS LIST 18

SECTION 1
GENERAL

This section is extracted from instruction manual.

Low boost
Amplification de basses fréquences

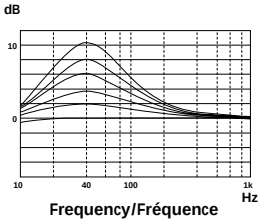

Cut-off frequency (LPF)
Fréquence de coupure (LPF)

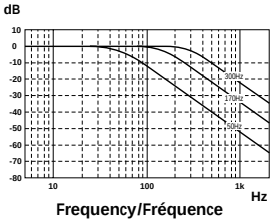

Circuit Diagram
Schéma du circuit

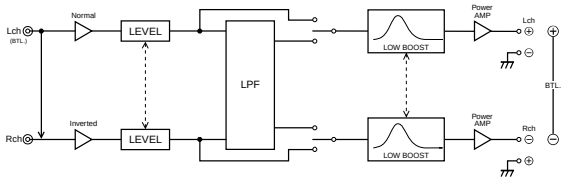

Features

- Maximum power output of 400W per channel (at 4 Ω).
- This unit can be used as a bridging amplifier with a maximum output of 1,200 W.
- Direct connection can be made with the speaker output of your car audio if it is not equipped with a line output (High level input connection).
- Built-in variable LPF (Low-pass filter) and low boost circuit.
- Dual mode connection possible for a multi-speaker system.
- Protection circuit.
- Pulse power supply * for stable, regulated output power.

* ***Pulse power supply***
This unit has a built-in power regulator which converts the power supplied by the DC 12 V car battery into high speed pulses using a semiconductor switch. These pulses are stepped up by the built-in pulse transformer and separated into both positive and negative power supplies before being converted into direct current again. This light weight power supply system provides a highly efficient power supply with a low impedance output.

Caractéristiques

- Puissance de sortie maximale de 400W par canal (à 4 Ω).
- Cet appareil peut être utilisé comme amplificateur en pont d'une sortie maximale de 1 200W.
- Une connexion directe est possible avec la sortie haut-parleur de votre autoradio si celle-ci n'est pas équipée d'une sortie de ligne (connexion d'entrée haut niveau).
- Filtre passe-bas(LPF) intégré et circuit à faible amplification.
- Double mode de connexion possible au moyen d'un système à plusieurs haut-parleurs.
- Circuit de protection.
- Alimentation électrique par impulsions * pour une puissance de sortie stable, régulée.

* ***Alimentation électrique par impulsions***
Cet appareil est équipé d'un régulateur de puissance intégré qui convertit la puissance fournie par une batterie de voiture de 12 V CC en impulsions ultra-rapides au moyen d'un commutateur à semi-conducteur. Ces impulsions sont amplifiées par le transformateur d'impulsions intégré et séparées en alimentation positive et négative avant d'être reconverties en courant continu. Ce système d'alimentation de faible poids assure une alimentation électrique très efficace pour une sortie d'impédance faible.

Location and Function of Controls

1 **POWER/PROTECTOR indicator**
Lights up in green during operation. When the PROTECTOR is activated the indicator will change from green to red. When the PROTECTOR is activated refer to the Troubleshooting Guide.

2 **LEVEL adjustment control**
The input level can be adjusted with this control. Turn it in the clockwise direction when the output level of the car audio seems low.

3 **LOW BOOST level control**
Turn this control to boost the frequencies around 40 Hz to a maximum of 10 dB.

4 **Cut-off frequency adjustment control**
Sets the cut-off frequency (50 – 300 Hz) for the low-pass filter.

5 **FILTER selector switch**
When the switch is in the LPF position, the filter is set to low-pass.

Emplacement et fonction des commandes

1 **Indicateur POWER/PROTECTOR**
S'allume en vert en cours de fonctionnement. Lorsque PROTECTOR est activé, le voyant passe du vert au rouge. Lorsque PROTECTOR est activé, reportez-vous au guide de dépannage.

2 **Commande de réglage LEVEL**
Le niveau d'entrée peut se régler avec cette commande. Tournez cette commande dans le sens des aiguilles d'une montre lorsque le niveau de sortie de l'autoradio semble faible.

3 **Commande de niveau LOW BOOST**
Tournez cette commande pour amplifier les fréquences autour de 40 Hz jusqu'à un maximum de 10 dB.

4 **Commandes de réglage de la fréquence de coupure**
Permet de régler la fréquence de coupure (50 – 300 Hz) pour le filtre passe-bas.

5 **Commutateur de sélection FILTER**
Lorsque le commutateur de sélection est en position LPF, le filtre est réglé sur passe-bas.

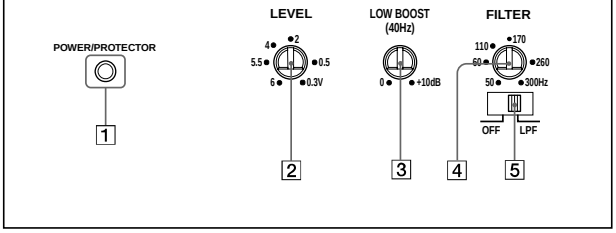

Connections

Caution

- Before making any connections, disconnect the ground terminal of the car battery to avoid short circuits.
- Be sure to use speakers with an adequate power rating. If you use small capacity speakers, they may be damaged.
- Do not connect the ⊖ terminal of the speaker system to the car chassis, and do not connect the ⊖ terminal of the right speaker with that of the left speaker.
- Install the input and output cords away from the power supply wire as running them close together can generate some interference noise.
- This unit is a high powered amplifier. Therefore, it may not perform to its full potential if used with the speaker cords supplied with the car.
- If your car is equipped with a computer system for navigation or some other purpose, do not to remove the ground wire from the car battery. If you disconnect the wire, the computer memory may be erased. To avoid short circuits when making connections, disconnect the +12 V power supply wire until all the other wires have been connected.

Connexions

Attention

- Avant d'effectuer les connexions, débranchez la borne de masse de la batterie de voiture pour éviter tout court-circuit.
- Veillez à utiliser des haut-parleurs de puissance adéquate. Si vous utilisez des haut-parleurs de faible capacité, ils risquent d'être endommagés.
- Ne raccordez pas la borne ⊖ du système de haut-parleurs à la carrosserie de la voiture ni la borne ⊖ du haut-parleur droit avec celle du haut-parleur gauche.
- Eloignez les câbles d'entrée et de sortie du câble d'alimentation pour éviter les interférences.
- Cet appareil est un amplificateur de haute puissance. Il ne peut donc déployer sa pleine puissance que si les câbles de haut-parleurs de la voiture lui sont raccordés.
- Si votre voiture est équipée d'un système de navigation ou d'un ordinateur de bord, ne retirez pas le fil de terre de la batterie de la voiture, sinon les données mémorisées seront effacées. Pour éviter un court-circuit lorsque vous effectuez les branchements, branchez le câble d'alimentation +12 V après avoir branché tous les autres fils.

Make the terminal connections as illustrated below.
Procédez aux connexions des bornes comme illustré ci-dessous.

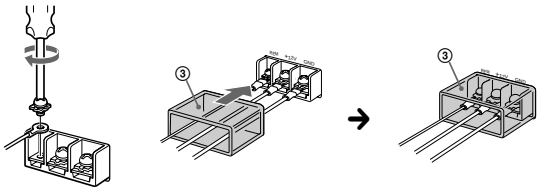

Pass the wires through the cap, connect the wires, then cover the terminals with the cap.

Note

*When you tighten the screw, be careful not to apply too much torque * as doing so may damage the screw.*

** The torque value should be less than 1 N•m.*

Faites passer les fils par le cache, raccordez les fils, puis recouvrez les bornes avec le cache.

Remarque

*Lorsque vous vissez la vis, faites attention à ne pas appliquer une trop grande force *, car cela pourrait endommager la vis.*

** Le couple de torsion doit être inférieur à 1 N•m.*

2-Speaker System
Système à 2 haut-parleurs

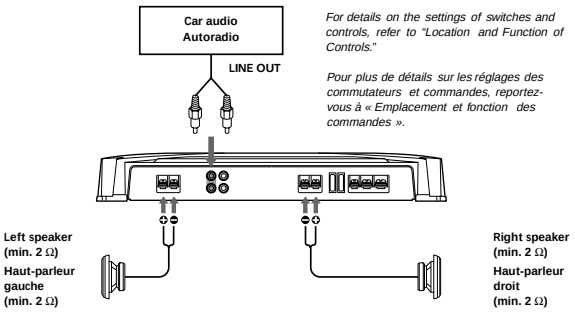

For details on the settings of switches and controls, refer to "Location and Function of Controls."

Pour plus de détails sur les réglages des commutateurs et commandes, reportez-vous à « Emplacement et fonction des commandes ».

As a Monaural Amplifier
Comme amplificateur monaural

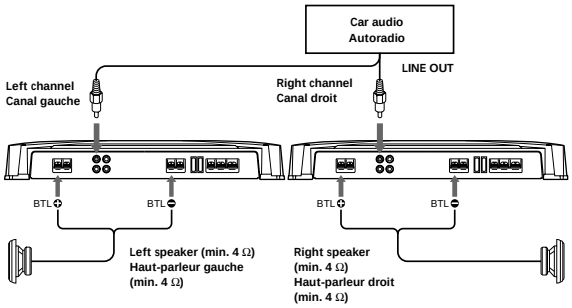

For details on the settings of switches and controls, refer to "Location and Function of Controls."

Note

Make sure that the line output from the car audio is connected to the jack marked "L (BTL)" on the unit.

Pour plus de détails sur les réglages des commutateurs et commandes, reportez-vous à « Emplacement et fonction des commandes ».

Remarque

Vérifiez que la sortie de ligne de l'autoradio est raccordée à la prise portant l'indication « L (BTL) » sur l'appareil.

Power Connection Wires
Câbles d'alimentation

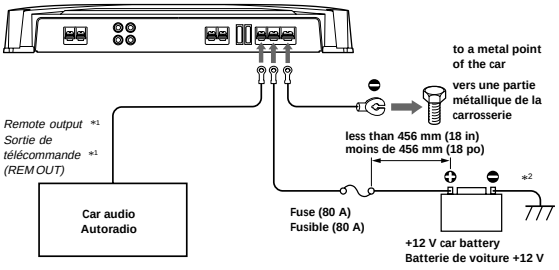

*1 *If you have the factory original or some other car audio without a remote output on the amplifier, connect the remote input terminal (REMOTE) to the accessory power supply.*

*1 *Si vous disposez du modèle d'origine ou d'un autre autoradio dont l'amplificateur ne comporte pas de sortie de télécommande, raccordez la borne d'entrée de télécommande (REMOTE) à la prise d'alimentation accessoires.*

Notes on the power supply

- *Connect the +12 V power supply wire only after all the other wires have been connected.*
- ***Be sure to connect the ground wire of the unit securely to a metal point of the car. A loose connection may cause a malfunction of the amplifier.***
- *Be sure to connect the remote control wire of the car audio to the remote terminal.*
- *When using a car audio without a remote output on the amplifier, connect the remote input terminal (REMOTE) to the accessory power supply.*
- *Use the power supply wire with a fuse attached (80 A).*
- *All power wires connected to the positive battery post should be fused within 456 mm (18 in) of the battery post, and before they pass through any metal.*
- *Make sure that the vehicle's battery wires connected to the vehicle (ground to chassis)*2 are of a wire gauge at least equal to that of the main power wire connected from the battery to the amplifier.*
- *Make sure that the wires to be connected to the **+12 V** and **GND** terminals of this unit are at least 4-Gauge (AWG-4) or have a sectional area of more than 22.0 mm² (7/8 in.²).*

Remarques sur l'alimentation électrique

- *Raccordez le câble d'alimentation +12 V uniquement après avoir réalisé toutes les autres connexions.*
- ***Raccordez correctement le fil de masse à une partie métallique de la voiture. Une connexion lâche peut provoquer un dysfonctionnement de l'amplificateur.***
- *Veillez à raccorder le fil de télécommande de l'autoradio à la borne de télécommande.*
- *Si vous utilisez un autoradio dont l'amplificateur ne comporte pas de sortie de télécommande, raccordez la borne d'entrée de la télécommande (REMOTE) à la prise d'alimentation accessoires.*
- *Utilisez un câble d'alimentation muni d'un fusible (80 A).*
- *Tous les fils électriques raccordés au support de batterie positif doivent être protégés par un fusible à une distance maximum de 456 mm (18 po) du support de batterie et avant de passer dans une partie métallique quelconque.*
- *Assurez-vous que les fils de la batterie du véhicule raccordés à ce dernier (sol au châssis)*2 sont d'un calibre au moins égal à celui du fil électrique principal reliant la batterie et l'amplificateur.*
- *Assurez-vous que les câbles à raccorder aux bornes **+12V** et **GND** de cet appareil sont d'un calibre d'au moins 4 (AWG-4) ou d'une section supérieure à 22,0 mm² (7/8 po²).*

As the Monaural Amplifier for a Subwoofer
Comme amplificateur monaural pour un haut-parleur d'extrêmes graves

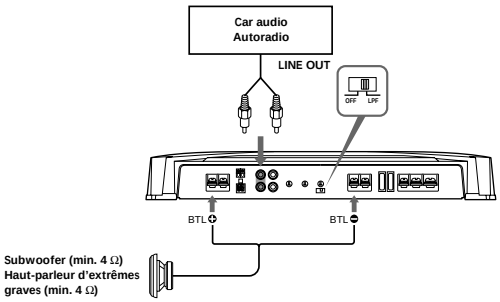

For details on the settings of switches and controls, refer to "Location and Function of Controls."

Note

If you wish to use a subwoofer as a monaural speaker, connect the speaker as illustrated above. The output signals to the subwoofer will be the combination of the both right and left output signals.

Pour plus de détails sur les réglages des commutateurs et commandes, reportez-vous à « Emplacement et fonction des commandes ».

Remarque

Si vous désirez utiliser un haut-parleur d'extrêmes graves comme haut-parleur monaural, raccordez le haut-parleur comme illustré ci-dessus. Les signaux de sortie vers le haut-parleur d'extrêmes graves seront une combinaison des signaux de sortie droit et gauche.

2-way System
Système 2 voies

Two output channels
Deux canaux de sortie

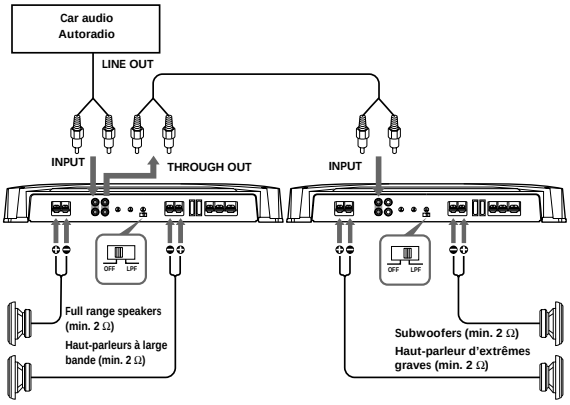

Use the THROUGH OUT terminal when you install more amplifiers. The signals are output as they were input. (LOW BOOST, LPF do not work.)

Notes
- *A maximum 3 amplifiers can be connected to the THROUGHOUT terminal. If you connect more than three amplifiers, it may cause problems such as sound dropout.*
- *High level input connection cannot use THROUGHOUT.*

Utilisez la borne THROUGH OUT lorsque vous installez plusieurs amplificateurs. Les signaux sont sortis comme ils sont entrés. (LOW BOOST, LPF ne fonctionnent pas.)

Remarques
- *Vous pouvez raccorder un maximum de 3 amplificateurs à la borne THROUGHOUT. Si vous raccordez plus de trois amplificateurs, cela peut provoquer des problèmes comme des baissesdu son.*
- *Avec une connexion d'entrée de haut niveau, vous ne pouvez pas utiliser THROUGHOUT.*

Four output channels
Quatre canaux de sortie

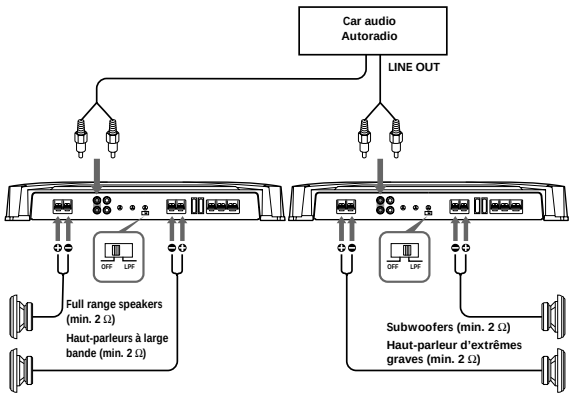

For details on the settings of switches and controls, refer to "Location and Function of Controls."

Note
In this system, the volume of the subwoofers will be controlled by the car audio fader control.

Pour plus de détails sur les réglages des commutateurs et commandes, reportez-vous à « Emplacement et fonction des commandes ».

Remarque
Dans ce système, le volume des haut-parleurs d'extrêmes graves est contrôlé par la commande de balance avant/arrière de l'autoradio.

Dual Mode System (With a Bridged Subwoofer)
Double mode de connexion (avec un haut-parleur d'extrêmes graves en pont)

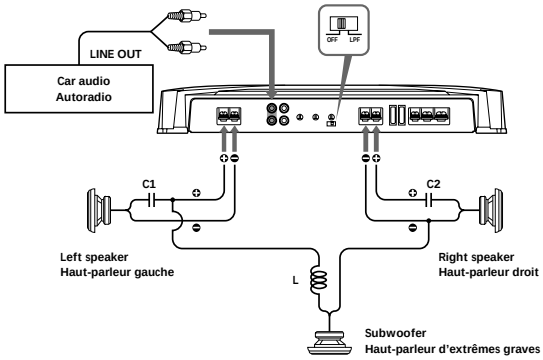

Table of crossover values for 6 dB/octave (4 Ω)

Crossover Frequency unit: Hz	L (coil)* unit: mH	C1/C2 (capacitor)* unit: µF
50	12.7	800
80	8.2	500
100	6.2	400
130	4.7	300
150	4.2	270
200	3.3	200
260	2.4	150
400	1.6	100
600	1.0	68
800	0.8	50
1000	0.6	39

* (not supplied)

Tableau des valeurs de recoupement pour 6 dB/octave (4 Ω)

Fréquence de recoupement unité : Hz	L (bobine)* unité : mH	C1/C2 (condensateur)* unité : µF
50	12,7	800
80	8,2	500
100	6,2	400
130	4,7	300
150	4,2	270
200	3,3	200
260	2,4	150
400	1,6	100
600	1,0	68
800	0,8	50
1000	0,6	39

* (non fournis)

Notes
- *When using passive crossover networks in a multi-speaker system, care must be taken as the speaker system's impedance should not be lower than that of the suitable impedance for this unit.*
- *When you are installing a 12 decibels/octave system in your car, the following points must be considered. In a 12 decibels/octave system where both a choke and capacitor are used in series to form a circuit, a great care must be taken when they are connected. In such a circuit, there is going to be an increase in the current which by-passes the speaker with frequencies at around the crossover frequency. If audio signals are continued to be fed into the crossover frequency area, it may cause the amplifier to become abnormally hot or the fuse will be blown. Also if the speaker is disconnected, a series-resonant circuit will be formed by the choke and the capacitor. In this case, the impedance in the resonance area will decrease dramatically resulting in a short circuit like situation causing a damage to the amplifier. Therefore, make sure that a speaker is connected to such a circuit at all times.*

Remarques
- *Lorsque vous utilisez des circuits de recoupement de fréquence passifs dans un système à plusieurs haut-parleurs, assurez-vous que l'impédance du système n'est pas inférieure à celle prévue pour cet appareil.*
- *Lorsque vous installez un système à 12 décibels/octave dans votre voiture, vous devez respecter les points suivants. Dans un système à 12 décibels/octave où la bobine d'arrêt et le condensateur sont utilisés en série pour former un circuit, vous devez réaliser les branchements avec beaucoup de précaution. Dans ce type de circuit, une augmentation du courant contournant le haut-parleur se produit dans les fréquences se situant autour de la fréquence de coupure. Si des signaux audio continuent d'être fournis dans la zone de la fréquence de recoupement, une surchauffe risque de se produire dans l'amplificateur et le fusible risque de griller. Si le haut-parleur n'est pas raccordé, un circuit de résonance série sera créé par la bobine et le condensateur. Dans ce cas, l'impédance dans la zone de résonance sera considérablement réduite, et comme dans le cas d'un court-circuit, l'amplificateur peut être endommagé. Par conséquent, veillez à ce qu'un haut-parleur soit toujours raccordé au circuit.*

High Level Input Connection (As a Monaural Amplifier for a Subwoofer)
Connexion d'entrée à haut niveau
(Comme amplificateur monaural pour un haut-parleur d'extrêmes graves)

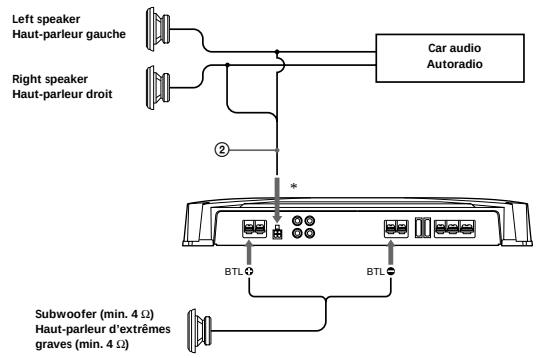

For details on the settings of switches and controls, refer to "Location and Function of Controls."

Note
If you wish to use a subwoofer as a monaural speaker, connect the speaker as illustrated above. The output signals to the subwoofer will be the combination of both the right and left output signals.

Pour plus de détails sur les réglages des commutateurs et commandes, reportez-vous à « Emplacement et fonction des commandes ».

Remarque
Si vous désirez utiliser un haut-parleur d'extrêmes graves comme haut-parleur monaural, raccordez le haut-parleur comme illustré ci-dessus. Les signaux de sortie vers le haut-parleur d'extrêmes graves seront une combinaison des signaux de sortie droit et gauche.

High Level Input Connection (2-Speaker System)
Connexion d'entrée à haut niveau
(Système à 2 haut-parleurs)

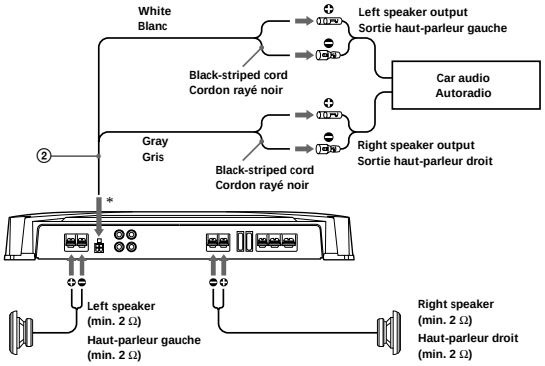

For details on the settings of switches and controls, refer to "Location and Function of Controls."

Pour plus de détails sur les réglages des commutateurs et commandes, reportez-vous à « Emplacement et fonction des commandes ».

High Level Input Connection (As a Monaural Amplifier)
Connexion d'entrée à haut niveau
(Comme amplificateur monaural)

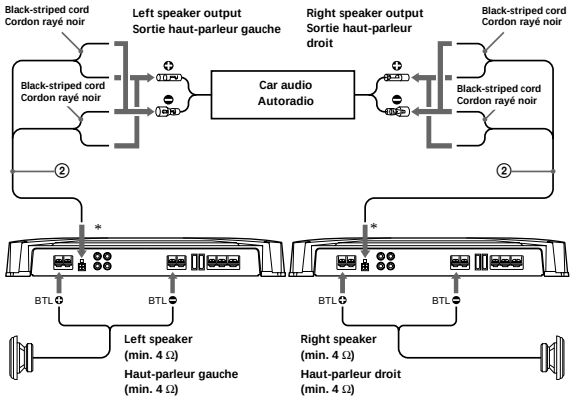

For details on the settings of switches and controls, refer to "Location and Function of Controls."

Pour plus de détails sur les réglages des commutateurs et commandes, reportez-vous à « Emplacement et fonction des commandes ».

*** High Level Input Connector**
*** Connecteur d'entrée à haut niveau**

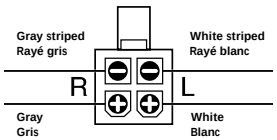

SECTION 2
DISASSEMBLY

Note : This set can be disassemble according to the following sequence.

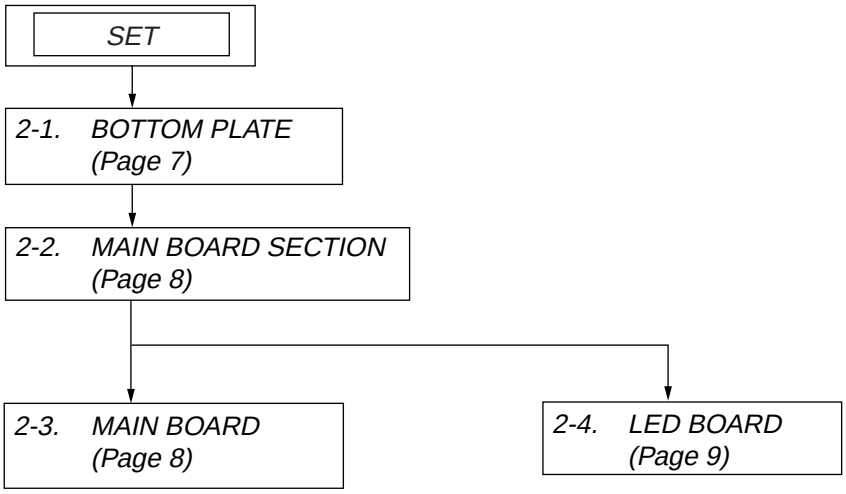

Note : Follow the disassembly procedure in the numerical order given.

2-1. BOTTOM PLATE

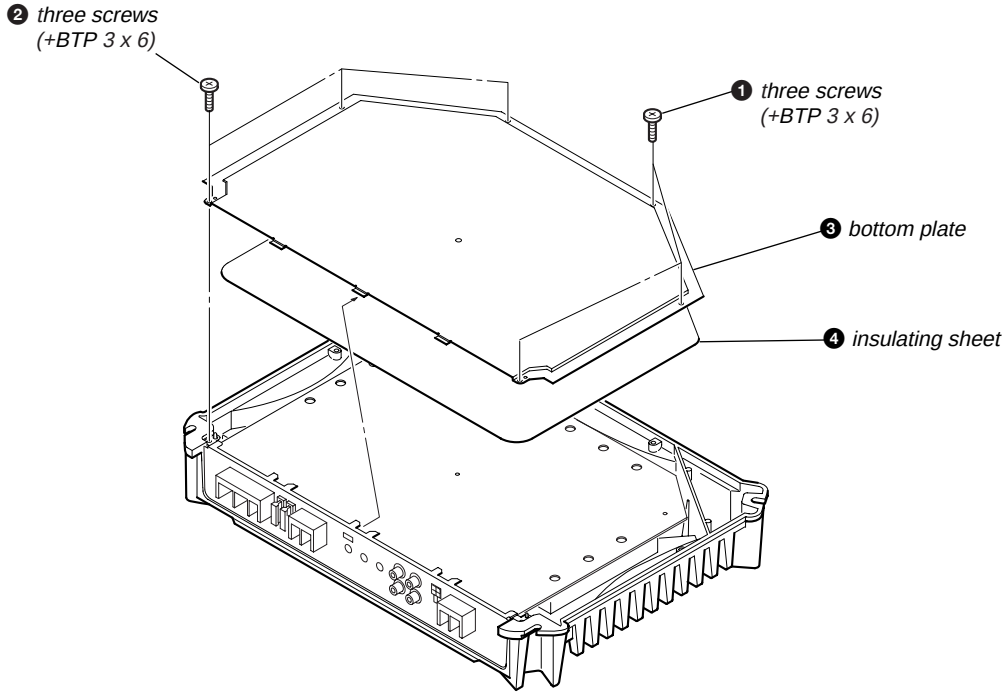

2-2. MAIN BOARD SECTION

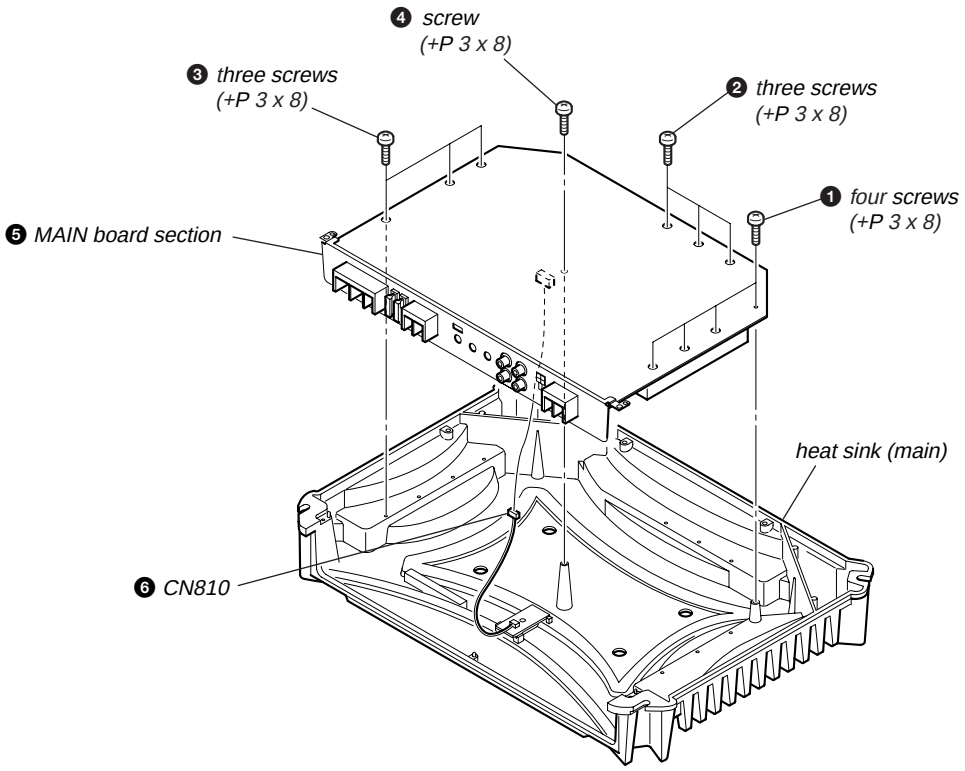

2-3. MAIN BOARD

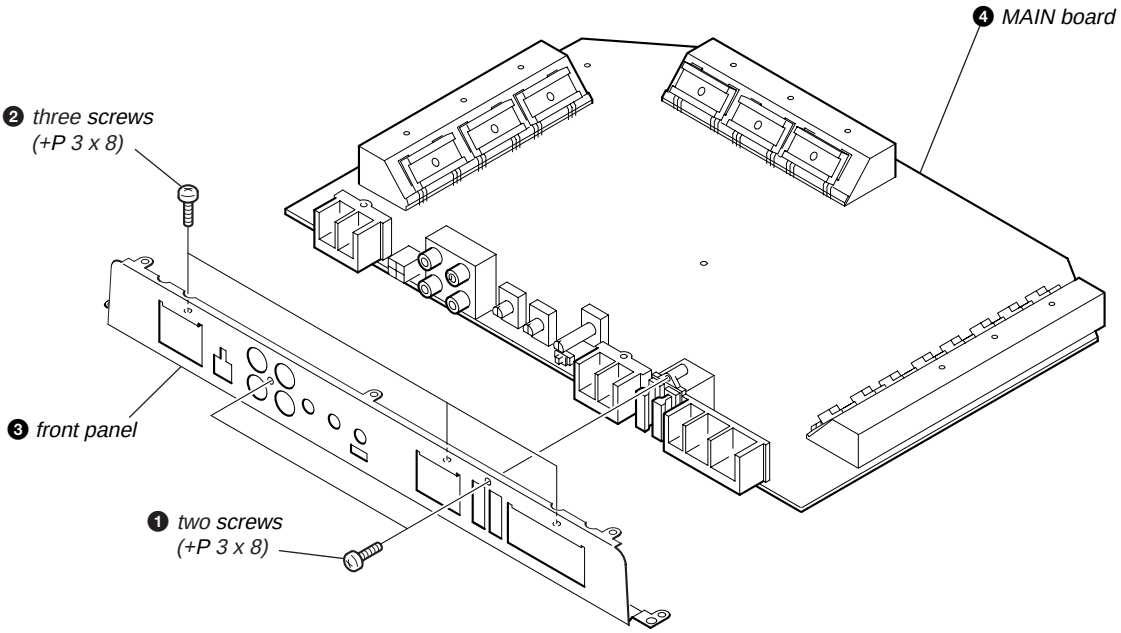

2-4. LED BOARD

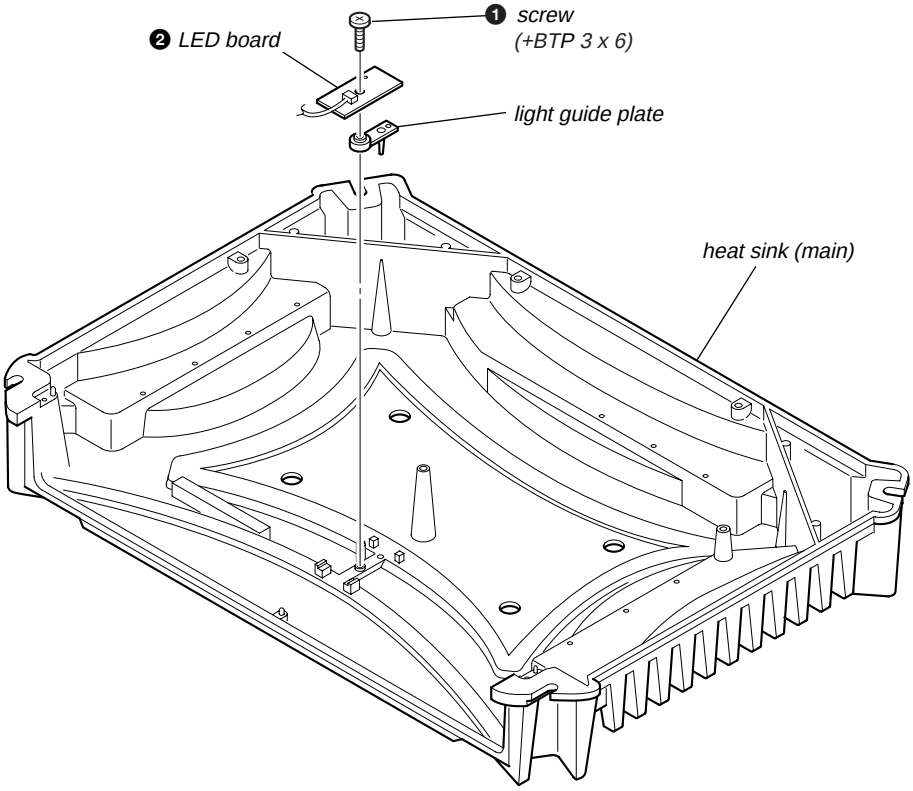

SECTION 3
ELECTRICAL ADJUSTMENT

Bias Adjustment

Note : In Bias Adjustment, adjust RV103 if any of Q108 through Q113 are replaced. Adjust RV203 if any of Q208 through Q213 are replaced.

Condition : This adjustment should be performed about one minute after the remote mode is turned on at a room temperature of about 25°C.

Setting :

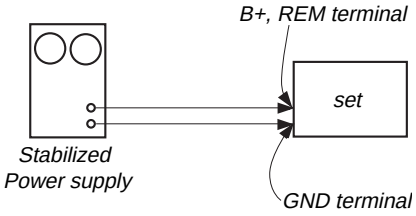

Procedure :

1. Turn the variable resistors RV103 (L-CH) and RV203 (R-CH) full clockwise as seen from the component side to minimize the bias current.
2. The input signal is to be no signal.
3. Apply the voltage to the B+ and REM terminals from the stabilized power supply and gradually increase it up to 12.0 V while checking for any unusual current.
4. Adjust each of RV103 (L-CH) and RV203 (R-CH) so that the power current of the stabilized power supply is increased in steps of 700 mA (total of 1.4 A).
5. After adjustment, check that the power current is at 1.65 to 2.05 A.

Adjustment Location : Main board (component side)

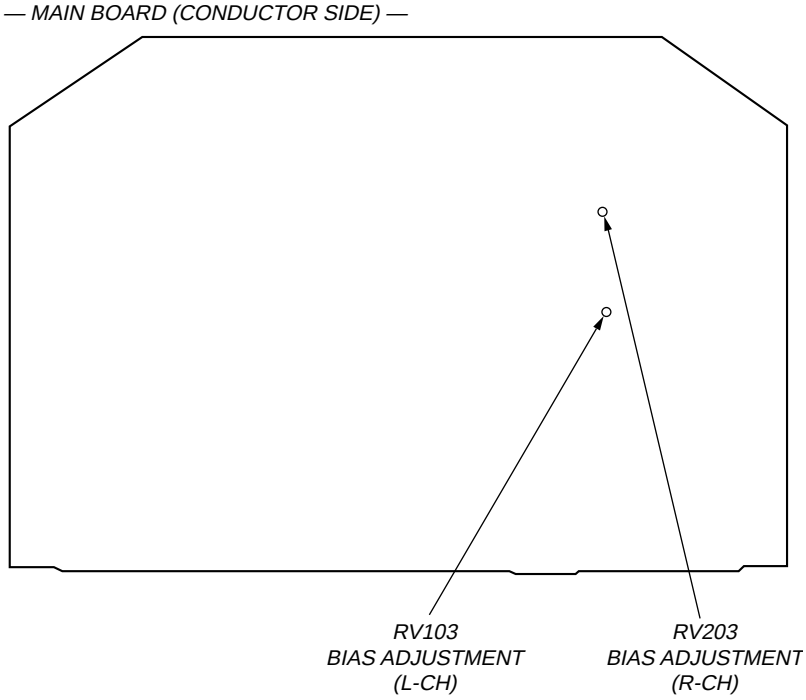

SECTION 4
DIAGRAMS

4-1. BLOCK DIAGRAM

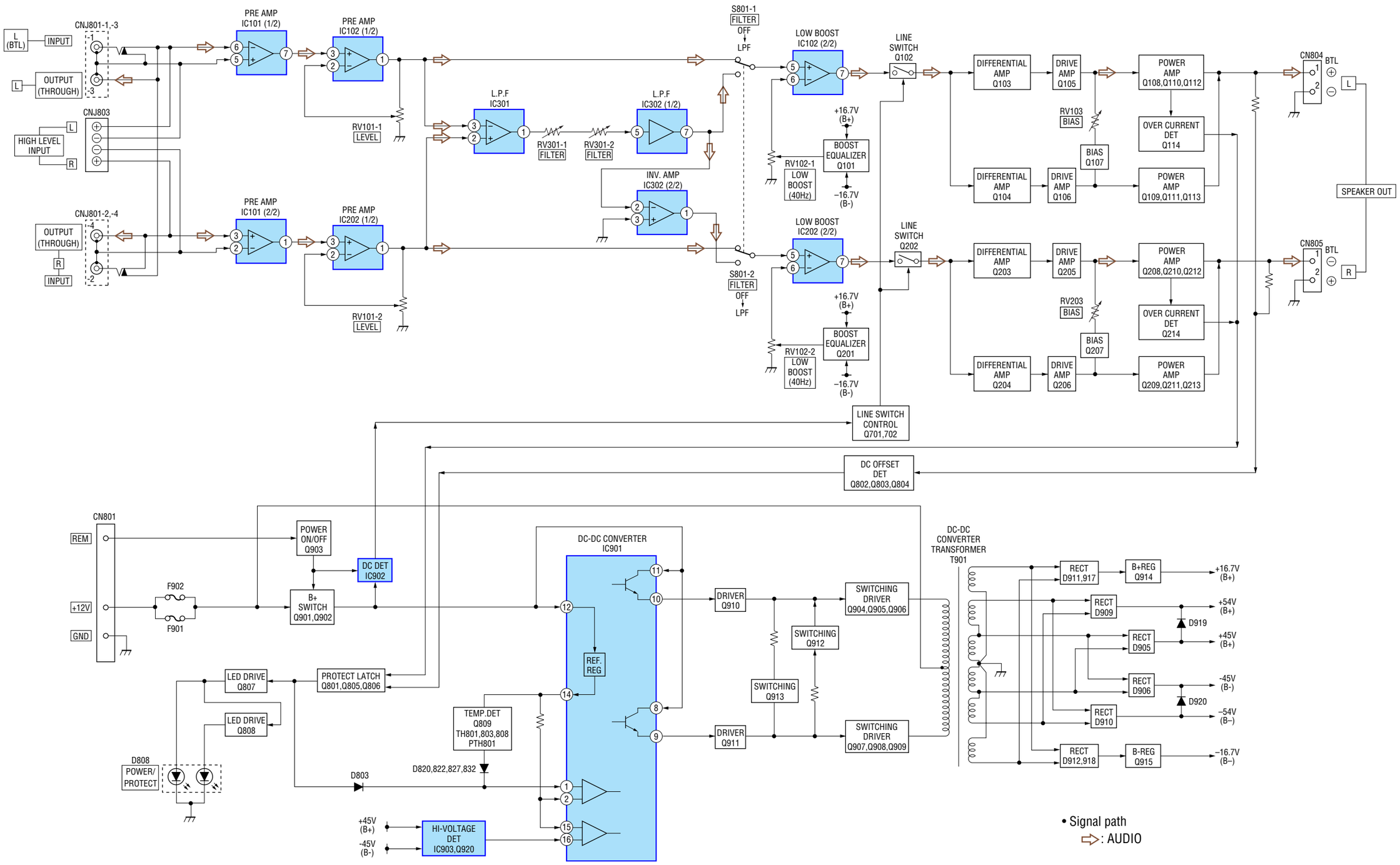

4-2. SCHEMATIC DIAGRAM — MAIN SECTION (1/2) — • Refer to page 15 for Common Note on Schematic Diagrams and IC Block Diagram.

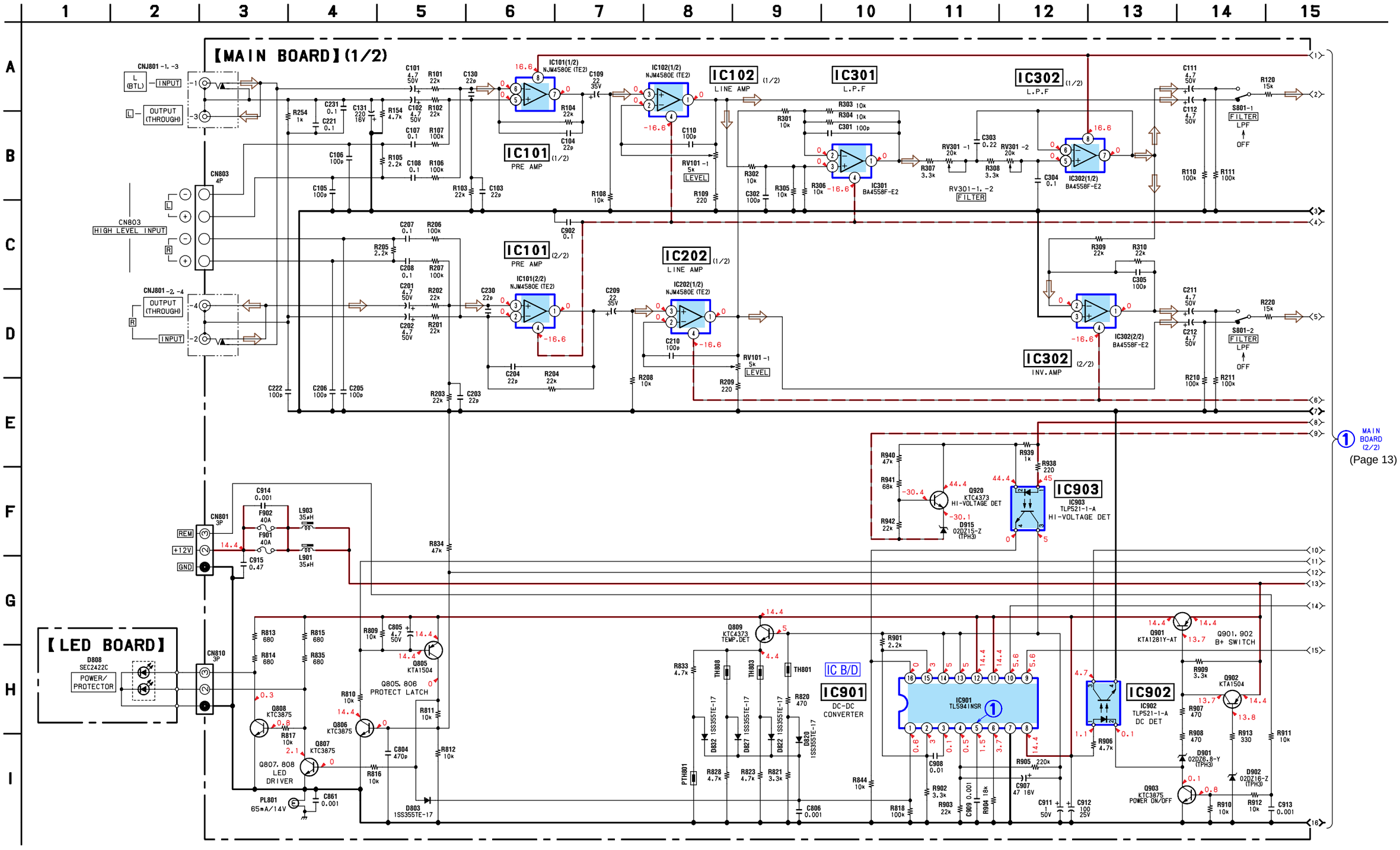

Note:	Note:
The components identified by mark ⚠ or dotted line with mark ⚠ are critical for safety. Replace only with part number specified.	Les composants identifiés par une marque ⚠ sont critiques pour la sécurité. Ne les remplacer que par une piéce portant le numéro spécifié.

• **Waveform**

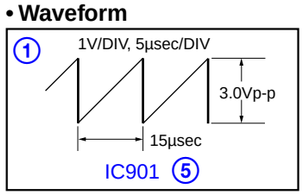

4-3. SCHEMATIC DIAGRAM — MAIN SECTION (2/2) —

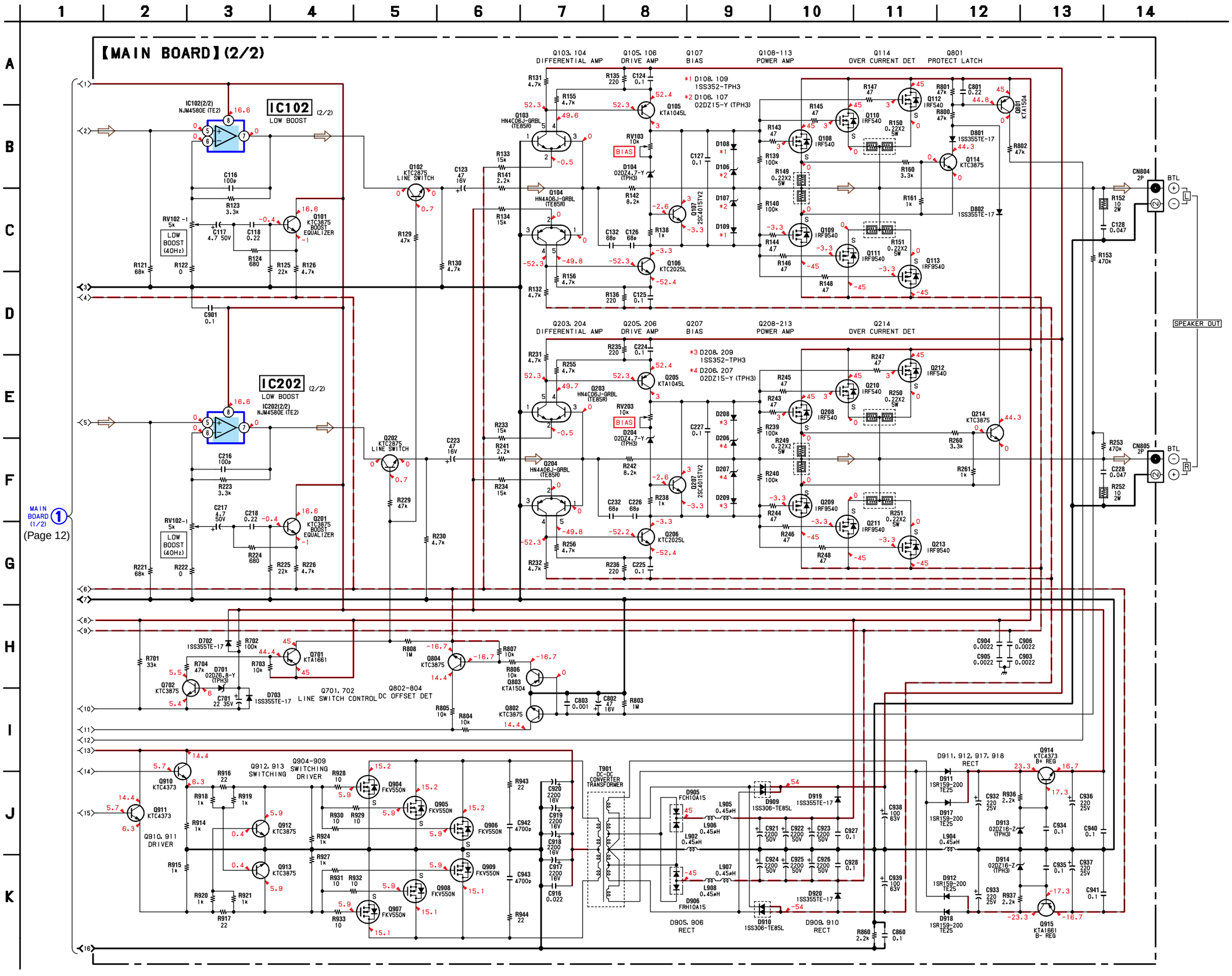

4-4. PRINTED WIRING BOARDS — MAIN SECTION — • Refer to page 15 for Common Note on Printed Wiring Boards and Semiconductor Location.

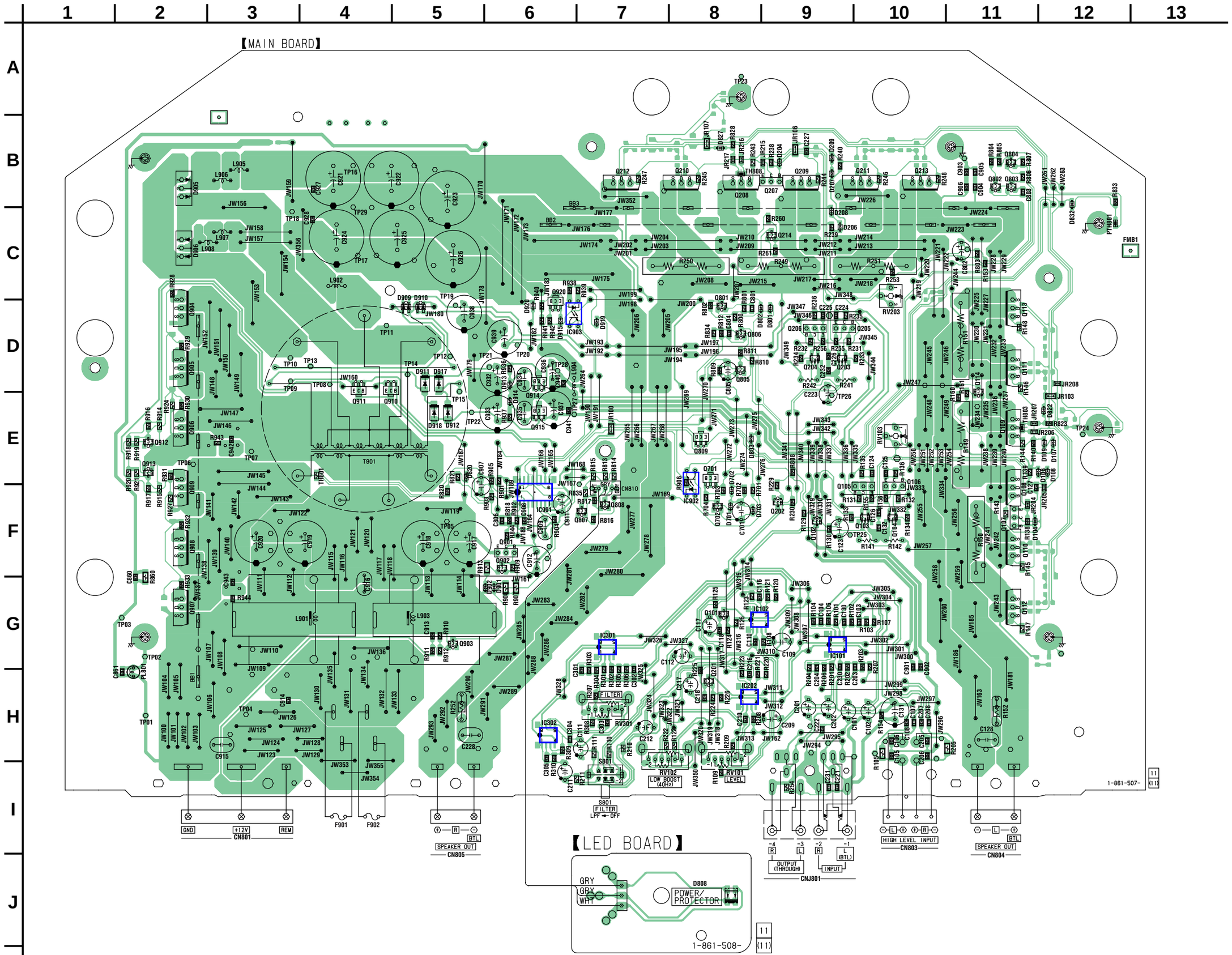

• Semiconductor Location (MAIN BOARD)

Ref. No.	Location	Ref. No.	Location
D104	F-11	Q106	E-10
D106	E-12	Q107	F-11
D107	E-12	Q108	F-11
D108	E-12	Q109	E-11
D109	E-12	Q110	F-11
D204	B-9	Q111	D-11
D206	C-9	Q112	G-11
D207	B-9	Q113	D-11
D208	C-9	Q114	D-11
D209	B-9	Q201	H-8
D701	F-8	Q202	F-9
D702	E-8	Q203	D-9
D703	F-8	Q204	D-9
D801	D-9	Q205	D-10
D802	D-8	Q206	D-9
D803	E-8	Q207	B-9
D808	J-8	Q208	B-8
D820	E-5	Q209	B-9
D822	E-12	Q210	B-8
D827	B-8	Q211	B-10
D832	C-12	Q212	B-7
D901	G-6	Q213	B-10
D902	G-6	Q214	C-9
D905	B-2	Q701	E-8
D906	C-2	Q702	F-8
D909	D-5	Q801	D-8
D910	D-5	Q802	B-11
D911	D-5	Q803	B-11
D912	E-5	Q804	B-11
D913	D-6	Q805	D-8
D914	E-6	Q806	D-8
D915	D-6	Q807	F-7
D917	D-5	Q808	F-7
D918	E-5	Q809	E-8
D919	D-7	Q901	F-6
D920	D-6	Q902	F-6
		Q903	G-5
IC101	G-9	Q904	D-2
IC102	G-8	Q905	D-2
IC202	H-8	Q906	E-2
IC301	G-7	Q907	G-2
IC302	H-6	Q908	F-2
IC901	F-6	Q909	F-2
IC902	F-8	Q910	E-4
IC903	D-6	Q911	E-4
		Q912	E-2
Q101	G-8	Q913	E-2
Q102	F-9	Q914	E-6
Q103	F-10	Q915	E-6
Q104	F-10	Q920	C-6
Q105	F-9		

THIS NOTE IS COMMON FOR PRINTED WIRING BOARDS AND SCHEMATIC DIAGRAMS.
(In addition to this, the necessary note is printed in each block.)

for schematic diagram:
Note:
- All capacitors are in µF unless otherwise noted. (p: pF) 50 WV or less are not indicated except for electrolytics and tantalums.
- All resistors are in Ω and 1/4 W or less unless otherwise specified.
- % : indicates tolerance.
- : nonflammable resistor.
- : panel designation.

Note:	Note:
The components identified by mark ⚠ or dotted line with mark ⚠ are critical for safety. Replace only with part number specified.	Les composants identifiés par une marque ⚠ sont critiques pour la sécurité. Ne les remplacer que par une piéce portant le numéro spécifié.

- : B+ Line.
- : B– Line.
- : adjustment for repair.
- Power voltage is dc 14.4V and fed with regulated dc power supply from +12V and REM terminals.
- Voltage and waveform are dc with respect to ground under no-signal condition.
- Voltages are taken with a VOM (Input impedance 10 MΩ). Voltage variations may be noted due to normal production tolerances.
- Waveforms are taken with a oscilloscope. Voltage variations may be noted due to normal production tolerances.
- Circled numbers refer to waveforms.
- Signal path.
  ⇨ : AUDIO

for printed wiring boards:
Note:
- : parts extracted from the component side.
- : Pattern from the side which enables seeing.

• IC Block Diagram

IC901 TL594INSR

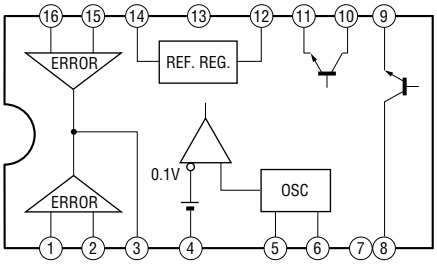

SECTION 5
EXPLODED VIEWS

NOTE:
- The mechanical parts with no reference number in the exploded views are not supplied.
- Items marked "*" are not stocked since they are seldom required for routine service. Some delay should be anticipated when ordering these items.
- Color Indication of Appearance Parts
  Example :
  KNOB, BALANCE (WHITE) ... (RED)
  ↑ Parts Color ↑ Cabinet's Color
- Accessories are given in the last of this parts list.

The components identified by mark ⚠ or dotted line with mark ⚠ are critical for safety.
Replace only with part number specified.

Les composants identifiés par une marque ⚠ sont critiques pour la sécurité.
Ne les remplacer que par une piéce portant le numéro spécifié.

5-1. HEAT SINK (MAIN) SECTION

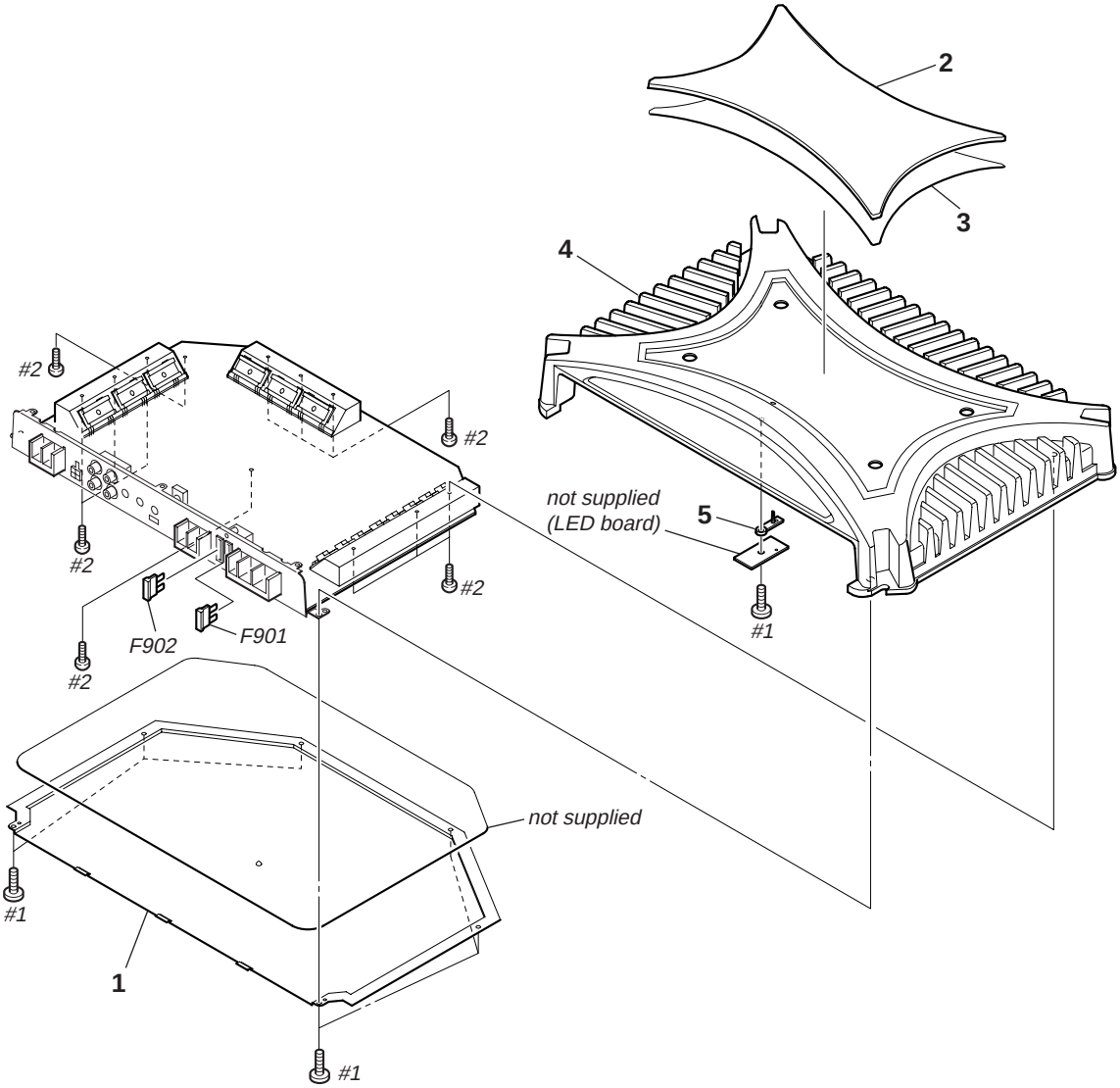

Ref. No.	Part No.	Description	Remark
1	3-262-168-01	PLATE, BOTTOM	
2	3-262-165-01	PLATE, ORNAMENTAL	
3	3-262-166-01	SHEET, ADHESIVE, DOUBLE-FACE	
4	3-262-162-01	HEAT SINK (MAIN)	
5	3-262-167-01	PLATE, LIGHT GUIDE	
⚠ F901	1-533-743-11	FUSE (BLADE TYPE) (AUTO FUSE) (40A)	
⚠ F902	1-533-743-11	FUSE (BLADE TYPE) (AUTO FUSE) (40A)	
#1	7-685-545-14	SCREW +BTP 3X6 TYPE2 N-S	
#2	7-685-646-79	SCREW +P 3X8 TYPE2 NON-SLIT	

5-2. MAIN BOARD SECTION

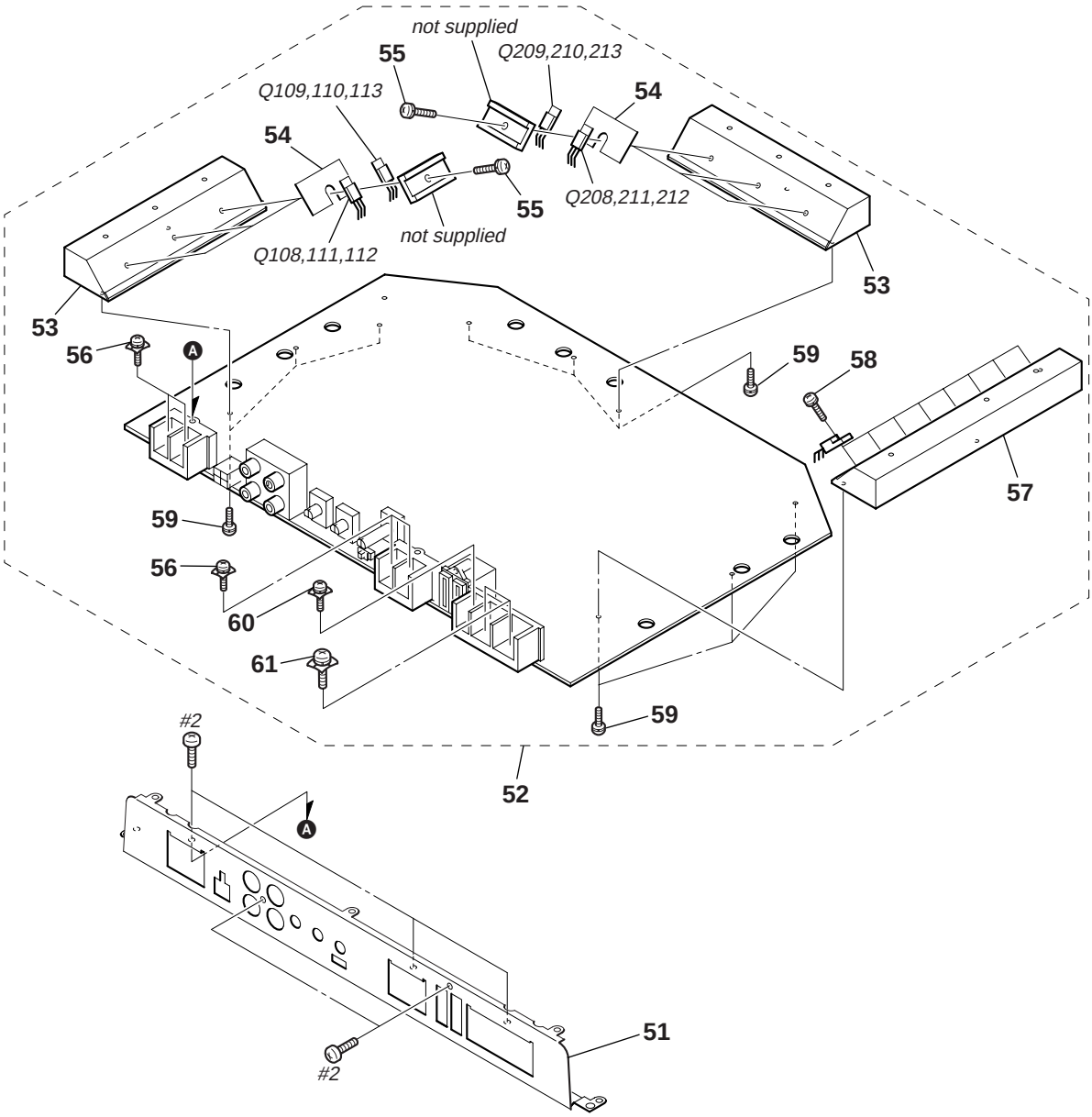

Ref. No.	Part No.	Description	Remark
51	3-262-163-01	PANEL, FRONT	
52	A-3283-470-A	MAIN BOARD, COMPLETE	
53	3-249-785-01	HEAT SINK (SUB OUTPUT)	
54	3-238-413-01	SHEET (TR), INSULATING	
55	3-225-183-21	SCREW (+PSW.TT.3XL)	
56	3-912-432-01	SCREW (+–B)	
57	3-249-786-01	HEAT SINK (SUB POWER)	
58	3-225-183-31	SCREW (+PSW.TT.3XL)	
59	3-225-184-11	SCREW (+PS.TT.3XL)	
60	3-912-431-01	SCREW (+–P)	
61	3-253-537-01	SCREW (M5X11)	
Q108	X-3383-027-1	FET PAIR ASSY (N) (IRF540) (set of 3)	
Q109	X-3383-028-1	FET PAIR ASSY (P) (IRF9540) (set of 3)	
Q110	X-3383-027-1	FET PAIR ASSY (N) (IRF540) (set of 3)	
Q111	X-3383-028-1	FET PAIR ASSY (P) (IRF9540) (set of 3)	
Q112	X-3383-027-1	FET PAIR ASSY (N) (IRF540) (set of 3)	
Q113	X-3383-028-1	FET PAIR ASSY (P) (IRF9540) (set of 3)	
Q208	X-3383-027-1	FET PAIR ASSY (N) (IRF540) (set of 3)	
Q209	X-3383-028-1	FET PAIR ASSY (P) (IRF9540) (set of 3)	
Q210	X-3383-027-1	FET PAIR ASSY (N) (IRF540) (set of 3)	
Q211	X-3383-028-1	FET PAIR ASSY (P) (IRF9540) (set of 3)	
Q212	X-3383-027-1	FET PAIR ASSY (N) (IRF540) (set of 3)	
Q213	X-3383-028-1	FET PAIR ASSY (P) (IRF9540) (set of 3)	
#2	7-685-646-79	SCREW +P 3X8 TYPE2 NON-SLIT	

LED MAIN

SECTION 6
ELECTRICAL PARTS LIST

NOTE:
- Due to standardization, replacements in the parts list may be different from the parts specified in the diagrams or the components used on the set.
- RESISTORS
  All resistors are in ohms.
  METAL:Metal-film resistor.
  METAL OXIDE: Metal oxide-film resistor.
  F:nonflammable
- Items marked "*" are not stocked since they are seldom required for routine service. Some delay should be anticipated when ordering these items.
- SEMICONDUCTORS
  In each case, u : µ, for example:
  uA.. : µA.. uPA.. : µPA..
  uPB.. : µPB.. uPC.. : µPC.. uPD.. : µPD..
- CAPACITORS
  uF : µF
- COILS
  uH : µH

The components identified by mark ⚠ or dotted line with mark ⚠ are critical for safety.
Replace only with part number specified.

Les composants identifiés par une marque ⚠ sont critiques pour la sécurité.
Ne les remplacer que par une piéce portant le numéro spécifié.

When indicating parts by reference number, please include the board.

Ref. No.	Part No.	Description			Remark
		LED BOARD			
		**********			
		< DIODE >			
D808	8-719-045-51	LED SEC2422C (POWER/PROTECTOR)			
**********					
	A-3283-470-A	MAIN BOARD, COMPLETE			
		**********			
	3-225-183-21	SCREW (+PSW.TT.3XL)			
	3-225-183-31	SCREW (+PSW.TT.3XL)			
	3-225-184-11	SCREW (+PS.TT.3XL)			
	3-238-413-01	SHEET (TR), INSULATING			
	3-249-785-01	HEAT SINK (SUB OUTPUT)			
	3-249-786-01	HEAT SINK (SUB POWER)			
	3-253-537-01	SCREW (M5X11)			
	3-912-431-01	SCREW (+–P)			
	3-912-432-01	SCREW (+–B)			
	7-685-646-79	SCREW +P 3X8 TYPE2 NON-SLIT			
		< CAPACITOR >			
C101	1-126-794-11	ELECT	4.7uF	20%	50V
C102	1-126-794-11	ELECT	4.7uF	20%	50V
C103	1-162-919-11	CERAMIC CHIP	22PF	5%	50V
C104	1-162-919-11	CERAMIC CHIP	22PF	5%	50V
C105	1-163-251-11	CERAMIC CHIP	100PF	5%	50V
C106	1-163-251-11	CERAMIC CHIP	100PF	5%	50V
C107	1-107-826-11	CERAMIC CHIP	0.1uF	10%	16V
C108	1-107-826-11	CERAMIC CHIP	0.1uF	10%	16V
C109	1-126-796-11	ELECT	22uF	20%	35V
C110	1-162-927-11	CERAMIC CHIP	100PF	5%	50V
C111	1-126-794-11	ELECT	4.7uF	20%	50V
C112	1-126-794-11	ELECT	4.7uF	20%	50V
C116	1-162-927-11	CERAMIC CHIP	100PF	5%	50V
C117	1-126-794-11	ELECT	4.7uF	20%	50V
C118	1-127-715-11	CERAMIC CHIP	0.22uF	10%	16V
C123	1-126-786-11	ELECT	47uF	20%	16V
C124	1-107-826-11	CERAMIC CHIP	0.1uF	10%	16V
C125	1-107-826-11	CERAMIC CHIP	0.1uF	10%	16V
C126	1-162-925-11	CERAMIC CHIP	68PF	5%	50V
C127	1-107-826-11	CERAMIC CHIP	0.1uF	10%	16V
C128	1-136-161-00	FILM	0.047uF	5%	50V
C130	1-162-919-11	CERAMIC CHIP	22PF	5%	50V
C131	1-128-499-11	ELECT	220uF	20%	16V
C132	1-162-925-11	CERAMIC CHIP	68PF	5%	50V
C201	1-126-794-11	ELECT	4.7uF	20%	50V
C202	1-126-794-11	ELECT	4.7uF	20%	50V
C203	1-162-919-11	CERAMIC CHIP	22PF	5%	50V
C204	1-162-919-11	CERAMIC CHIP	22PF	5%	50V
C205	1-163-251-11	CERAMIC CHIP	100PF	5%	50V
C206	1-163-251-11	CERAMIC CHIP	100PF	5%	50V
C207	1-107-826-11	CERAMIC CHIP	0.1uF	10%	16V
C208	1-107-826-11	CERAMIC CHIP	0.1uF	10%	16V
C209	1-126-796-11	ELECT	22uF	20%	35V
C210	1-162-927-11	CERAMIC CHIP	100PF	5%	50V
C211	1-126-794-11	ELECT	4.7uF	20%	50V
C212	1-126-794-11	ELECT	4.7uF	20%	50V
C216	1-162-927-11	CERAMIC CHIP	100PF	5%	50V
C217	1-126-794-11	ELECT	4.7uF	20%	50V
C218	1-127-715-11	CERAMIC CHIP	0.22uF	10%	16V
C221	1-115-339-11	CERAMIC CHIP	0.1uF	10%	50V
C222	1-162-927-11	CERAMIC CHIP	100PF	5%	50V
C223	1-126-786-11	ELECT	47uF	20%	16V
C224	1-107-826-11	CERAMIC CHIP	0.1uF	10%	16V
C225	1-107-826-11	CERAMIC CHIP	0.1uF	10%	16V
C226	1-162-925-11	CERAMIC CHIP	68PF	5%	50V
C227	1-107-826-11	CERAMIC CHIP	0.1uF	10%	16V
C228	1-136-161-00	FILM	0.047uF	5%	50V
C230	1-162-919-11	CERAMIC CHIP	22PF	5%	50V
C231	1-115-339-11	CERAMIC CHIP	0.1uF	10%	50V
C232	1-162-925-11	CERAMIC CHIP	68PF	5%	50V
C301	1-162-927-11	CERAMIC CHIP	100PF	5%	50V
C302	1-162-927-11	CERAMIC CHIP	100PF	5%	50V
C303	1-127-715-11	CERAMIC CHIP	0.22uF	10%	16V
C304	1-107-826-11	CERAMIC CHIP	0.1uF	10%	16V
C305	1-162-927-11	CERAMIC CHIP	100PF	5%	50V
C701	1-126-796-11	ELECT	22uF	20%	35V
C801	1-127-715-11	CERAMIC CHIP	0.22uF	10%	16V
C802	1-126-786-11	ELECT	47uF	20%	16V
C803	1-162-964-11	CERAMIC CHIP	0.001uF	10%	50V
C804	1-162-962-11	CERAMIC CHIP	470PF	10%	50V
C805	1-126-794-11	ELECT	4.7uF	20%	50V
C806	1-162-964-11	CERAMIC CHIP	0.001uF	10%	50V
C860	1-107-826-11	CERAMIC CHIP	0.1uF	10%	16V
C861	1-162-964-11	CERAMIC CHIP	0.001uF	10%	50V
C901	1-115-339-11	CERAMIC CHIP	0.1uF	10%	50V
C902	1-115-339-11	CERAMIC CHIP	0.1uF	10%	50V
C903	1-164-161-11	CERAMIC CHIP	0.0022uF	10%	100V
C904	1-164-161-11	CERAMIC CHIP	0.0022uF	10%	100V
C905	1-164-161-11	CERAMIC CHIP	0.0022uF	10%	100V

Ref. No.	Part No.	Description			Remark
C906	1-164-161-11	CERAMIC CHIP	0.0022uF	10%	100V
C907	1-126-786-11	ELECT	47uF	20%	16V
C908	1-162-970-11	CERAMIC CHIP	0.01uF	10%	25V
C909	1-130-471-00	MYLAR	0.001uF	5%	50V
C911	1-126-960-11	ELECT	1uF	20%	50V
C912	1-128-126-11	ELECT	100uF	20%	25V
C913	1-162-964-11	CERAMIC CHIP	0.001uF	10%	50V
C914	1-162-964-11	CERAMIC CHIP	0.001uF	10%	50V
C915	1-137-194-81	FILM	0.47uF	5%	50V
C916	1-137-372-11	MYLAR	0.022uF	5%	50V
C917	1-128-951-21	ELECT	2200uF	20%	16V
C918	1-128-951-21	ELECT	2200uF	20%	16V
C919	1-128-951-21	ELECT	2200uF	20%	16V
C920	1-128-951-21	ELECT	2200uF	20%	16V
C921	1-100-199-31	ELECT	2200uF	20%	50V
C922	1-100-199-31	ELECT	2200uF	20%	50V
C923	1-100-199-31	ELECT	2200uF	20%	50V
C924	1-100-199-31	ELECT	2200uF	20%	50V
C925	1-100-199-31	ELECT	2200uF	20%	50V
C926	1-100-199-31	ELECT	2200uF	20%	50V
C927	1-115-339-11	CERAMIC CHIP	0.1uF	10%	50V
C928	1-115-339-11	CERAMIC CHIP	0.1uF	10%	50V
C932	1-104-666-11	ELECT	220uF	20%	25V
C933	1-104-666-11	ELECT	220uF	20%	25V
C934	1-136-165-00	FILM	0.1uF	5%	50V
C935	1-136-165-00	FILM	0.1uF	5%	50V
C936	1-104-666-11	ELECT	220uF	20%	25V
C937	1-104-666-11	ELECT	220uF	20%	25V
C938	1-128-576-11	ELECT	100uF	20%	63V
C939	1-128-576-11	ELECT	100uF	20%	63V
C940	1-115-339-11	CERAMIC CHIP	0.1uF	10%	50V
C941	1-115-339-11	CERAMIC CHIP	0.1uF	10%	50V
C942	1-162-968-11	CERAMIC CHIP	0.0047uF	10%	50V
C943	1-162-968-11	CERAMIC CHIP	0.0047uF	10%	50V
		< TERMINAL BOARD >			
CN801	1-694-983-11	TERMINAL BOARD (3P+FUSE) (REM,+12V,GND,40A)			
CN804	1-694-984-11	TERMINAL BOARD (SPEAKER OUT (L))			
CN805	1-694-984-11	TERMINAL BOARD (SPEAKER OUT (R))			
		< CONNECTOR >			
* CN803	1-691-785-11	PIN, CONNECTOR (PC BOARD) 4P (HIGH LEVEL INPUT)			
CN810	1-506-468-11	PIN, CONNECTOR 3P			
		< JACK >			
CNJ801	1-779-078-41	JACK, PIN 4P (INPUT,OUTPUT (THROUGH))			
		< DIODE >			
D104	8-719-065-06	DIODE 02DZ4.7-Y(TPH3)			
D106	8-719-065-43	DIODE 02DZ15-Z(TPH3)			
D107	8-719-065-43	DIODE 02DZ15-Z(TPH3)			
D108	8-719-016-74	DIODE 1SS352			
D109	8-719-016-74	DIODE 1SS352			
D204	8-719-065-06	DIODE 02DZ4.7-Y(TPH3)			
D206	8-719-065-43	DIODE 02DZ15-Z(TPH3)			
D207	8-719-065-43	DIODE 02DZ15-Z(TPH3)			

Ref. No.	Part No.	Description	Remark
D208	8-719-016-74	DIODE 1SS352	
D209	8-719-016-74	DIODE 1SS352	
D701	8-719-065-18	DIODE 02DZ6.8-Y(TPH3)	
D702	8-719-988-61	DIODE 1SS355TE-17	
D703	8-719-988-61	DIODE 1SS355TE-17	
D801	8-719-988-61	DIODE 1SS355TE-17	
D802	8-719-988-61	DIODE 1SS355TE-17	
D803	8-719-988-61	DIODE 1SS355TE-17	
D820	8-719-988-61	DIODE 1SS355TE-17	
D822	8-719-988-61	DIODE 1SS355TE-17	
D827	8-719-988-61	DIODE 1SS355TE-17	
D832	8-719-988-61	DIODE 1SS355TE-17	
D901	8-719-065-18	DIODE 02DZ6.8-Y(TPH3)	
D902	8-719-065-46	DIODE 02DZ16-Z(TPH3)	
D905	8-719-079-00	DIODE FCH10A15	
D906	8-719-079-01	DIODE FRH10A15	
D909	8-719-054-55	DIODE 1SS306-TE85L	
D910	8-719-054-55	DIODE 1SS306-TE85L	
D911	8-719-079-92	DIODE 1SR159-200TE25	
D912	8-719-079-92	DIODE 1SR159-200TE25	
D913	8-719-065-46	DIODE 02DZ16-Z(TPH3)	
D914	8-719-065-46	DIODE 02DZ16-Z(TPH3)	
D915	8-719-065-42	DIODE 02DZ15-Y(TPH3)	
D917	8-719-079-92	DIODE 1SR159-200TE25	
D918	8-719-079-92	DIODE 1SR159-200TE25	
D919	8-719-988-61	DIODE 1SS355TE-17	
D920	8-719-988-61	DIODE 1SS355TE-17	
		< FUSE >	
⚠F901	1-533-743-11	FUSE (BLADE TYPE) (AUTO FUSE) (40A)	
⚠F902	1-533-743-11	FUSE (BLADE TYPE) (AUTO FUSE) (40A)	
		< IC >	
IC101	8-759-385-17	IC NJM4580E(TE2)	
IC102	8-759-385-17	IC NJM4580E(TE2)	
IC202	8-759-385-17	IC NJM4580E(TE2)	
IC301	8-759-909-71	IC BA4558F	
IC302	8-759-909-71	IC BA4558F	
IC901	6-703-643-01	IC TL594INSR	
		< PHOTO TRANSISTOR >	
IC902	8-719-800-42	PHOTO TRANSISTOR TLP521-1-A	
IC903	8-719-800-42	PHOTO TRANSISTOR TLP521-1-A	
		< JUMPER RESISTOR >	
JR100	1-216-296-11	SHORT CHIP 0	
JR103	1-216-296-11	SHORT CHIP 0	
JR106	1-216-296-11	SHORT CHIP 0	
JR107	1-216-296-11	SHORT CHIP 0	
JR204	1-216-295-11	SHORT CHIP 0	
JR205	1-216-295-11	SHORT CHIP 0	
JR206	1-216-295-11	SHORT CHIP 0	
JR207	1-216-295-11	SHORT CHIP 0	
JR208	1-216-295-11	SHORT CHIP 0	
JR215	1-216-295-11	SHORT CHIP 0	
JR216	1-216-295-11	SHORT CHIP 0	
JR217	1-216-295-11	SHORT CHIP 0	

The components identified by mark ⚠ or dotted line with mark ⚠ are critical for safety. Replace only with part number specified.	Les composants identifiés par une marque ⚠ sont critiques pour la sécurité. Ne les remplacer que par une piéce portant le numéro spécifié.

MAIN

Ref. No.	Part No.	Description	Remark
		< COIL >	
L901	1-456-139-12	COIL, CHOKE 35uH	
L902	1-410-396-71	INDUCTOR, FERRITE BEAD	
L903	1-456-139-12	COIL, CHOKE 35uH	
L904	1-410-396-71	INDUCTOR, FERRITE BEAD	
L905	1-410-396-71	INDUCTOR, FERRITE BEAD	
L906	1-410-396-71	INDUCTOR, FERRITE BEAD	
L907	1-410-396-71	INDUCTOR, FERRITE BEAD	
L908	1-410-396-71	INDUCTOR, FERRITE BEAD	
		< PILOT LAMP >	
PL801	1-517-156-11	LAMP, PILOT (65mA/14V)	
		< THERMISTOR (POSITIVE) >	
PTH801	1-805-163-21	THERMISTOR, POSITIVE	
		< TRANSISTOR >	
Q101	8-729-034-51	TRANSISTOR KTC3875	
Q102	6-550-686-01	TRANSISTOR KTC2875-B-RTK	
Q103	6-550-031-01	TRANSISTOR HN4C06J-GRBL(TE85R)	
Q104	6-550-032-01	TRANSISTOR HN4A06J-GRBL(TE85R)	
Q105	6-550-691-01	TRANSISTOR KTA1045L-Y	
Q106	6-550-692-01	TRANSISTOR KTC2025L-Y	
Q107	8-729-041-66	TRANSISTOR 2SC4015TV2	
Q108	X-3383-027-1	FET PAIR ASSY (N) (IRF540) (set of 3)	
Q109	X-3383-028-1	FET PAIR ASSY (P) (IRF9540) (set of 3)	
Q110	X-3383-027-1	FET PAIR ASSY (N) (IRF540) (set of 3)	
Q111	X-3383-028-1	FET PAIR ASSY (P) (IRF9540) (set of 3)	
Q112	X-3383-027-1	FET PAIR ASSY (N) (IRF540) (set of 3)	
Q113	X-3383-028-1	FET PAIR ASSY (P) (IRF9540) (set of 3)	
Q114	8-729-034-51	TRANSISTOR KTC3875	
Q201	8-729-034-51	TRANSISTOR KTC3875	
Q202	6-550-686-01	TRANSISTOR KTC2875-B-RTK	
Q203	6-550-031-01	TRANSISTOR HN4C06J-GRBL(TE85R)	
Q204	6-550-032-01	TRANSISTOR HN4A06J-GRBL(TE85R)	
Q205	6-550-691-01	TRANSISTOR KTA1045L-Y	
Q206	6-550-692-01	TRANSISTOR KTC2025L-Y	
Q207	8-729-041-66	TRANSISTOR 2SC4015TV2	
Q208	X-3383-027-1	FET PAIR ASSY (N) (IRF540) (set of 3)	
Q209	X-3383-028-1	FET PAIR ASSY (P) (IRF9540) (set of 3)	
Q210	X-3383-027-1	FET PAIR ASSY (N) (IRF540) (set of 3)	
Q211	X-3383-028-1	FET PAIR ASSY (P) (IRF9540) (set of 3)	
Q212	X-3383-027-1	FET PAIR ASSY (N) (IRF540) (set of 3)	
Q213	X-3383-028-1	FET PAIR ASSY (P) (IRF9540) (set of 3)	
Q214	8-729-034-51	TRANSISTOR KTC3875	
Q701	6-550-690-01	TRANSISTOR KTA1661	
Q702	8-729-034-51	TRANSISTOR KTC3875	
Q801	8-729-034-50	TRANSISTOR KTA1504	
Q802	8-729-034-51	TRANSISTOR KTC3875	
Q803	8-729-034-50	TRANSISTOR KTA1504	
Q804	8-729-034-51	TRANSISTOR KTC3875	
Q805	8-729-034-50	TRANSISTOR KTA1504	
Q806	8-729-034-51	TRANSISTOR KTC3875	
Q807	8-729-034-51	TRANSISTOR KTC3875	
Q808	8-729-034-51	TRANSISTOR KTC3875	
Q809	6-550-693-01	TRANSISTOR KTC4373	
Q901	8-729-052-82	TRANSISTOR KTA1281Y-AT	
Q902	8-729-034-50	TRANSISTOR KTA1504	
Q903	8-729-034-51	TRANSISTOR KTC3875	
Q904	6-550-341-01	FET FKV550N	
Q905	6-550-341-01	FET FKV550N	
Q906	6-550-341-01	FET FKV550N	
Q907	6-550-341-01	FET FKV550N	
Q908	6-550-341-01	FET FKV550N	
Q909	6-550-341-01	FET FKV550N	
Q910	6-550-693-01	TRANSISTOR KTC4373	
Q911	6-550-693-01	TRANSISTOR KTC4373	
Q912	8-729-034-51	TRANSISTOR KTC3875	
Q913	8-729-034-51	TRANSISTOR KTC3875	
Q914	6-550-693-01	TRANSISTOR KTC4373	
Q915	6-550-690-01	TRANSISTOR KTA1661	
Q920	6-550-693-01	TRANSISTOR KTC4373	
		< RESISTOR >	
R101	1-216-837-11	METAL CHIP 22K 5% 1/10W	
R102	1-216-837-11	METAL CHIP 22K 5% 1/10W	
R103	1-216-837-11	METAL CHIP 22K 5% 1/10W	
R104	1-216-837-11	METAL CHIP 22K 5% 1/10W	
R105	1-208-494-61	RES-CHIP 2.2K 2% 1/8W	
R106	1-216-845-11	METAL CHIP 100K 5% 1/10W	
R107	1-216-845-11	METAL CHIP 100K 5% 1/10W	
R108	1-216-833-11	METAL CHIP 10K 5% 1/10W	
R109	1-216-033-00	METAL CHIP 220 5% 1/10W	
R110	1-216-845-11	METAL CHIP 100K 5% 1/10W	
R111	1-216-845-11	METAL CHIP 100K 5% 1/10W	
R120	1-216-077-11	RES-CHIP 15K 5% 1/10W	
R121	1-216-843-11	METAL CHIP 68K 5% 1/10W	
R122	1-216-295-11	SHORT CHIP 0	
R123	1-216-827-11	METAL CHIP 3.3K 5% 1/10W	
R124	1-216-045-00	METAL CHIP 680 5% 1/10W	
R125	1-216-837-11	METAL CHIP 22K 5% 1/10W	
R126	1-216-829-11	METAL CHIP 4.7K 5% 1/10W	
R129	1-216-841-11	METAL CHIP 47K 5% 1/10W	
R130	1-216-829-11	METAL CHIP 4.7K 5% 1/10W	
R131	1-216-829-11	METAL CHIP 4.7K 5% 1/10W	
R132	1-216-829-11	METAL CHIP 4.7K 5% 1/10W	
R133	1-216-077-11	RES-CHIP 15K 5% 1/10W	
R134	1-216-077-11	RES-CHIP 15K 5% 1/10W	
R135	1-216-033-00	METAL CHIP 220 5% 1/10W	
R136	1-216-033-00	METAL CHIP 220 5% 1/10W	
R138	1-216-821-11	METAL CHIP 1K 5% 1/10W	
R139	1-216-845-11	METAL CHIP 100K 5% 1/10W	
R140	1-216-845-11	METAL CHIP 100K 5% 1/10W	
R141	1-249-421-11	CARBON 2.2K 5% 1/4W	
R142	1-249-428-11	CARBON 8.2K 5% 1/4W	
R143	1-216-017-11	RES-CHIP 47 5% 1/10W	
R144	1-216-017-11	RES-CHIP 47 5% 1/10W	
R145	1-216-017-11	RES-CHIP 47 5% 1/10W	
R146	1-216-017-11	RES-CHIP 47 5% 1/10W	
R147	1-216-017-11	RES-CHIP 47 5% 1/10W	
R148	1-216-017-11	RES-CHIP 47 5% 1/10W	
R149	1-234-499-11	ENCAPSULATED COMPONENT 0.22X2 5W	
R150	1-234-499-11	ENCAPSULATED COMPONENT 0.22X2 5W	
R151	1-234-499-11	ENCAPSULATED COMPONENT 0.22X2 5W	
R152	1-215-880-31	METAL OXIDE 10 5% 2W	F

Ref. No.	Part No.	Description			Remark
R153	1-216-853-11	METAL CHIP	470K	5%	1/10W
R154	1-216-065-11	RES-CHIP	4.7K	5%	1/10W
R155	1-216-829-11	METAL CHIP	4.7K	5%	1/10W
R156	1-216-829-11	METAL CHIP	4.7K	5%	1/10W
R160	1-216-827-11	METAL CHIP	3.3K	5%	1/10W
R161	1-216-821-11	METAL CHIP	1K	5%	1/10W
R201	1-216-837-11	METAL CHIP	22K	5%	1/10W
R202	1-216-837-11	METAL CHIP	22K	5%	1/10W
R203	1-216-837-11	METAL CHIP	22K	5%	1/10W
R204	1-216-837-11	METAL CHIP	22K	5%	1/10W
R205	1-208-494-61	RES-CHIP	2.2K	2%	1/8W
R206	1-216-845-11	METAL CHIP	100K	5%	1/10W
R207	1-216-845-11	METAL CHIP	100K	5%	1/10W
R208	1-216-833-11	METAL CHIP	10K	5%	1/10W
R209	1-216-033-00	METAL CHIP	220	5%	1/10W
R210	1-216-845-11	METAL CHIP	100K	5%	1/10W
R211	1-216-845-11	METAL CHIP	100K	5%	1/10W
R220	1-216-077-11	RES-CHIP	15K	5%	1/10W
R221	1-216-843-11	METAL CHIP	68K	5%	1/10W
R222	1-216-295-11	SHORT CHIP	0		
R223	1-216-827-11	METAL CHIP	3.3K	5%	1/10W
R224	1-216-045-00	METAL CHIP	680	5%	1/10W
R225	1-216-837-11	METAL CHIP	22K	5%	1/10W
R226	1-216-829-11	METAL CHIP	4.7K	5%	1/10W
R229	1-216-841-11	METAL CHIP	47K	5%	1/10W
R230	1-216-829-11	METAL CHIP	4.7K	5%	1/10W
R231	1-216-829-11	METAL CHIP	4.7K	5%	1/10W
R232	1-216-829-11	METAL CHIP	4.7K	5%	1/10W
R233	1-216-077-11	RES-CHIP	15K	5%	1/10W
R234	1-216-077-11	RES-CHIP	15K	5%	1/10W
R235	1-216-033-00	METAL CHIP	220	5%	1/10W
R236	1-216-033-00	METAL CHIP	220	5%	1/10W
R238	1-216-821-11	METAL CHIP	1K	5%	1/10W
R239	1-216-845-11	METAL CHIP	100K	5%	1/10W
R240	1-216-845-11	METAL CHIP	100K	5%	1/10W
R241	1-249-421-11	CARBON	2.2K	5%	1/4W
R242	1-249-428-11	CARBON	8.2K	5%	1/4W
R243	1-216-017-11	RES-CHIP	47	5%	1/10W
R244	1-216-017-11	RES-CHIP	47	5%	1/10W
R245	1-216-017-11	RES-CHIP	47	5%	1/10W
R246	1-216-017-11	RES-CHIP	47	5%	1/10W
R247	1-216-017-11	RES-CHIP	47	5%	1/10W
R248	1-216-017-11	RES-CHIP	47	5%	1/10W
R249	1-234-499-11	ENCAPSULATED COMPONENT	0.22X2		5W
R250	1-234-499-11	ENCAPSULATED COMPONENT	0.22X2		5W
R251	1-234-499-11	ENCAPSULATED COMPONENT	0.22X2		5W
R252	1-215-880-31	METAL OXIDE	10	5%	2W F
R253	1-216-853-11	METAL CHIP	470K	5%	1/10W
R254	1-216-049-11	RES-CHIP	1K	5%	1/10W
R255	1-216-829-11	METAL CHIP	4.7K	5%	1/10W
R256	1-216-829-11	METAL CHIP	4.7K	5%	1/10W
R260	1-216-827-11	METAL CHIP	3.3K	5%	1/10W
R261	1-216-821-11	METAL CHIP	1K	5%	1/10W
R301	1-216-833-11	METAL CHIP	10K	5%	1/10W
R302	1-216-833-11	METAL CHIP	10K	5%	1/10W
R303	1-216-833-11	METAL CHIP	10K	5%	1/10W
R304	1-216-833-11	METAL CHIP	10K	5%	1/10W
R305	1-216-833-11	METAL CHIP	10K	5%	1/10W
R306	1-216-833-11	METAL CHIP	10K	5%	1/10W
R307	1-216-827-11	METAL CHIP	3.3K	5%	1/10W
R308	1-216-827-11	METAL CHIP	3.3K	5%	1/10W
R309	1-216-837-11	METAL CHIP	22K	5%	1/10W
R310	1-216-837-11	METAL CHIP	22K	5%	1/10W
R701	1-216-839-11	METAL CHIP	33K	5%	1/10W
R702	1-216-845-11	METAL CHIP	100K	5%	1/10W
R703	1-216-833-11	METAL CHIP	10K	5%	1/10W
R704	1-216-841-11	METAL CHIP	47K	5%	1/10W
R800	1-216-841-11	METAL CHIP	47K	5%	1/10W
R801	1-216-841-11	METAL CHIP	47K	5%	1/10W
R802	1-216-841-11	METAL CHIP	47K	5%	1/10W
R803	1-216-857-11	METAL CHIP	1M	5%	1/10W
R804	1-216-833-11	METAL CHIP	10K	5%	1/10W
R805	1-216-833-11	METAL CHIP	10K	5%	1/10W
R806	1-216-833-11	METAL CHIP	10K	5%	1/10W
R807	1-216-833-11	METAL CHIP	10K	5%	1/10W
R808	1-216-857-11	METAL CHIP	1M	5%	1/10W
R809	1-216-833-11	METAL CHIP	10K	5%	1/10W
R810	1-216-833-11	METAL CHIP	10K	5%	1/10W
R811	1-216-833-11	METAL CHIP	10K	5%	1/10W
R812	1-216-833-11	METAL CHIP	10K	5%	1/10W
R813	1-216-045-00	METAL CHIP	680	5%	1/10W
R814	1-216-045-00	METAL CHIP	680	5%	1/10W
R815	1-216-045-00	METAL CHIP	680	5%	1/10W
R816	1-216-833-11	METAL CHIP	10K	5%	1/10W
R817	1-216-833-11	METAL CHIP	10K	5%	1/10W
R818	1-216-845-11	METAL CHIP	100K	5%	1/10W
R820	1-216-817-11	METAL CHIP	470	5%	1/10W
R821	1-216-827-11	METAL CHIP	3.3K	5%	1/10W
R823	1-216-829-11	METAL CHIP	4.7K	5%	1/10W
R828	1-216-829-11	METAL CHIP	4.7K	5%	1/10W
R833	1-216-829-11	METAL CHIP	4.7K	5%	1/10W
R834	1-216-841-11	METAL CHIP	47K	5%	1/10W
R835	1-216-045-00	METAL CHIP	680	5%	1/10W
R844	1-216-833-11	METAL CHIP	10K	5%	1/10W
R860	1-208-494-61	RES-CHIP	2.2K	2%	1/8W
R901	1-216-825-11	METAL CHIP	2.2K	5%	1/10W
R902	1-216-827-11	METAL CHIP	3.3K	5%	1/10W
R903	1-216-837-11	METAL CHIP	22K	5%	1/10W
R904	1-216-836-11	METAL CHIP	18K	5%	1/10W
R905	1-216-849-11	METAL CHIP	220K	5%	1/10W
R906	1-216-065-11	RES-CHIP	4.7K	5%	1/10W
R907	1-216-190-00	RES-CHIP	470	5%	1/8W
R908	1-216-190-00	RES-CHIP	470	5%	1/8W
R909	1-216-061-11	RES-CHIP	3.3K	5%	1/10W
R910	1-216-073-00	RES-CHIP	10K	5%	1/10W
R911	1-216-073-00	RES-CHIP	10K	5%	1/10W
R912	1-216-073-00	RES-CHIP	10K	5%	1/10W
R913	1-216-186-00	RES-CHIP	330	5%	1/8W
R914	1-216-049-11	RES-CHIP	1K	5%	1/10W
R915	1-216-049-11	RES-CHIP	1K	5%	1/10W
R916	1-216-009-11	RES-CHIP	22	5%	1/10W
R917	1-216-009-11	RES-CHIP	22	5%	1/10W
R918	1-216-049-11	RES-CHIP	1K	5%	1/10W
R919	1-216-049-11	RES-CHIP	1K	5%	1/10W
R920	1-216-049-11	RES-CHIP	1K	5%	1/10W
R921	1-216-049-11	RES-CHIP	1K	5%	1/10W

MAIN

Ref. No.	Part No.	Description			Remark
R924	1-216-049-11	RES-CHIP	1K	5%	1/10W
R927	1-216-049-11	RES-CHIP	1K	5%	1/10W
R928	1-216-001-00	METAL CHIP	10	5%	1/10W
R929	1-216-001-00	METAL CHIP	10	5%	1/10W
R930	1-216-001-00	METAL CHIP	10	5%	1/10W
R931	1-216-001-00	METAL CHIP	10	5%	1/10W
R932	1-216-001-00	METAL CHIP	10	5%	1/10W
R933	1-216-001-00	METAL CHIP	10	5%	1/10W
R936	1-216-825-11	METAL CHIP	2.2K	5%	1/10W
R937	1-216-825-11	METAL CHIP	2.2K	5%	1/10W
R938	1-216-033-00	METAL CHIP	220	5%	1/10W
R939	1-216-821-11	METAL CHIP	1K	5%	1/10W
R940	1-216-089-11	RES-CHIP	47K	5%	1/10W
R941	1-216-843-11	METAL CHIP	68K	5%	1/10W
R942	1-216-837-11	METAL CHIP	22K	5%	1/10W
R943	1-216-009-11	RES-CHIP	22	5%	1/10W
R944	1-216-009-11	RES-CHIP	22	5%	1/10W
		< VARIABLE RESISTOR >			
RV101	1-227-558-11	RES, VAR, CARBON 5KX2 (LEVEL)			
RV102	1-227-558-11	RES, VAR, CARBON 5KX2 (LOW BOOST (40Hz))			
RV301	1-227-557-11	RES, VAR, CARBON 20KX2 (FILTER)			
		< CERMET RESISTOR >			
RV103	1-241-764-11	RES, ADJ, CERMET 10K			
RV203	1-241-764-11	RES, ADJ, CERMET 10K			
		< SWITCH >			
S801	1-692-990-21	SWITCH, SLIDE (FILTER)			
		< TRANSFORMER >			
T901	1-439-635-21	TRANSFORMER, DC-DC CONVERTER			
		< THERMISTOR (NEGATIVE) >			
TH801	1-804-301-11	THERMISTOR, CHIP (NEGATIVE)			
TH803	1-804-301-11	THERMISTOR, CHIP (NEGATIVE)			
TH808	1-804-301-11	THERMISTOR, CHIP (NEGATIVE)			

****

ACCESSORIES
****

	3-263-512-11	MANUAL, INSTRUCTION (ENGLISH,FRENCH)
	3-263-512-21	MANUAL, INSTRUCTION (GERMAN,ITALIAN) (AEP,UK,E)
	3-263-512-31	MANUAL, INSTRUCTION (SPANISH, TRADITIONAL CHINESE) (AEP,UK,E)
	3-263-512-41	MANUAL, INSTRUCTION (DUTCH,PORTUGUESE) (AEP,UK,E)
	3-263-512-51	MANUAL, INSTRUCTION (SWEDISH,POLISH) (AEP,UK,E)
	3-263-512-61	MANUAL, INSTRUCTION (GREEK,RUSSIAN) (AEP,UK,E)

****

Ref. No.	Part No.	Description	Remark
		PARTS FOR INSTALLATION AND CONNECTIONS	
		**********	
101	3-367-410-01	SCREW (DIA.5X15), TAPPING (MOUNTING SCREW)	
102	1-690-779-31	CORD (WITH CONNECTOR) (0.2m)	
103	3-249-791-01	COVER (POWER)	

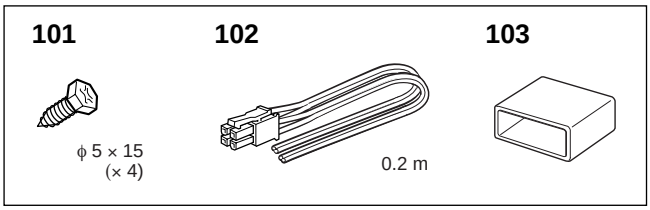

XM-2200GTX

SONY

SERVICE MANUAL

Ver. 1.3 2005. 05

US Model
Canadian Model
AEP Model
UK Model
E Model

SUPPLEMENT-1

File this supplement with the service manual.

Subject : Change the MAIN and LED boards.

Printed wiring board and schematic diagram of new type, and changed parts list are described in this Supplement-1.
When performing service and inspection, check the suffix of the part number of the MAIN and LED boards.

DISCRIMINATION

— MAIN BOARD (COMPONENT SIDE) —

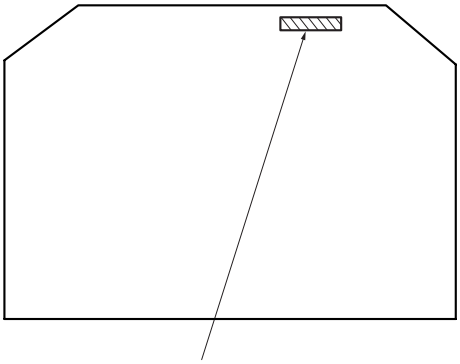

MAIN BOARD Part No.
Former : 1-861-507-11
New : 1-865-441-12

— LED BOARD (COMPONENT SIDE) —

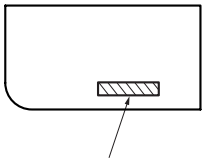

LED BOARD Part No.
Former : 1-861-508-11
New : 1-865-442-12

9-961-370-81

TABLE OF CONTENTS

1. Printed Wiring Boards –Main Section– 3
2. Schematic Diagram –Main Section (1/2)– 4
3. Schematic Diagram –Main Section (2/2)– 5
4. Electrical Parts List 6

• Semiconductor Location (MAIN BOARD)

Ref. No.	Location	Ref. No.	Location
D104	F-11	Q106	F-10
D106	E-11	Q107	F-11
D107	E-12	Q108	F-11
D108	E-12	Q109	E-11
D109	E-12	Q110	F-11
D204	B-9	Q111	D-11
D206	C-9	Q112	G-11
D207	B-9	Q113	D-11
D208	C-9	Q114	D-11
D209	B-9	Q201	H-8
D701	F-8	Q202	F-9
D702	E-8	Q203	D-9
D703	F-8	Q204	D-9
D801	D-9	Q205	D-10
D802	D-8	Q206	D-9
D803	E-8	Q207	B-9
D808	J-8	Q208	B-8
D820	E-5	Q209	B-9
D822	E-12	Q210	B-8
D827	B-8	Q211	B-10
D832	B-12	Q212	B-7
D901	G-6	Q213	B-10
D902	G-6	Q214	C-9
D905	B-2	Q701	E-8
D906	C-2	Q702	F-8
D909	D-5	Q801	D-8
D910	D-5	Q802	B-11
D911	D-5	Q803	B-11
D912	E-5	Q804	B-11
D913	D-6	Q805	D-8
D914	E-6	Q806	D-8
D915	D-6	Q807	F-7
D917	D-5	Q808	F-7
D918	E-5	Q809	E-8
D919	D-7	Q901	F-6
D920	D-6	Q902	F-6
		Q903	G-5
IC101	G-9	Q904	D-2
IC102	G-8	Q905	D-2
IC202	H-8	Q906	E-2
IC301	G-7	Q907	G-2
IC302	H-6	Q908	F-2
IC901	F-6	Q909	F-2
IC902	F-8	Q910	E-4
IC903	D-6	Q911	E-4
		Q912	E-2
Q101	G-8	Q913	E-2
Q102	F-9	Q914	E-6
Q103	F-10	Q915	E-6
Q104	F-10	Q920	C-6
Q105	F-10		

THIS NOTE IS COMMON FOR PRINTED WIRING BOARDS AND SCHEMATIC DIAGRAMS.
(In addition to this, the necessary note is printed in each block.)

for schematic diagram:
Note:
- All capacitors are in µF unless otherwise noted. (p: pF) 50 WV or less are not indicated except for electrolytics and tantalums.
- All resistors are in Ω and 1/4 W or less unless otherwise specified.
- % : indicates tolerance.
- : nonflammable resistor.
- : panel designation.

Note:	Note:
The components identified by mark ⚠ or dotted line with mark ⚠ are critical for safety. Replace only with part number specified.	Les composants identifiés par une marque ⚠ sont critiques pour la sécurité. Ne les remplacer que par une piéce portant le numéro spécifié.

- : B+ Line.
- : B– Line.
- : adjustment for repair.
- Power voltage is dc 14.4V and fed with regulated dc power supply from +12V and REM terminals.
- Voltage and waveform are dc with respect to ground under no-signal condition.
- Voltages are taken with a VOM (Input impedance 10 MΩ). Voltage variations may be noted due to normal production tolerances.
- Waveforms are taken with a oscilloscope. Voltage variations may be noted due to normal production tolerances.
- Circled numbers refer to waveforms.
- Signal path.
  : AUDIO
- (( )): Page of Supplement-1.

for printed wiring boards:
Note:
- : parts extracted from the component side.
- : Pattern from the side which enables seeing.

• IC Block Diagram

IC901 TL594INSR

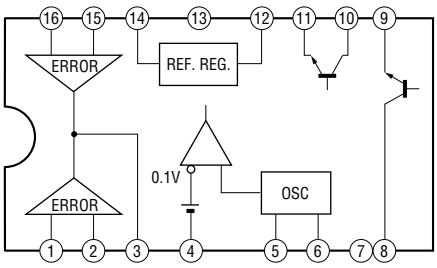

1. PRINTED WIRING BOARDS — MAIN SECTION — • Refer to page 2 for Semiconductor Location.

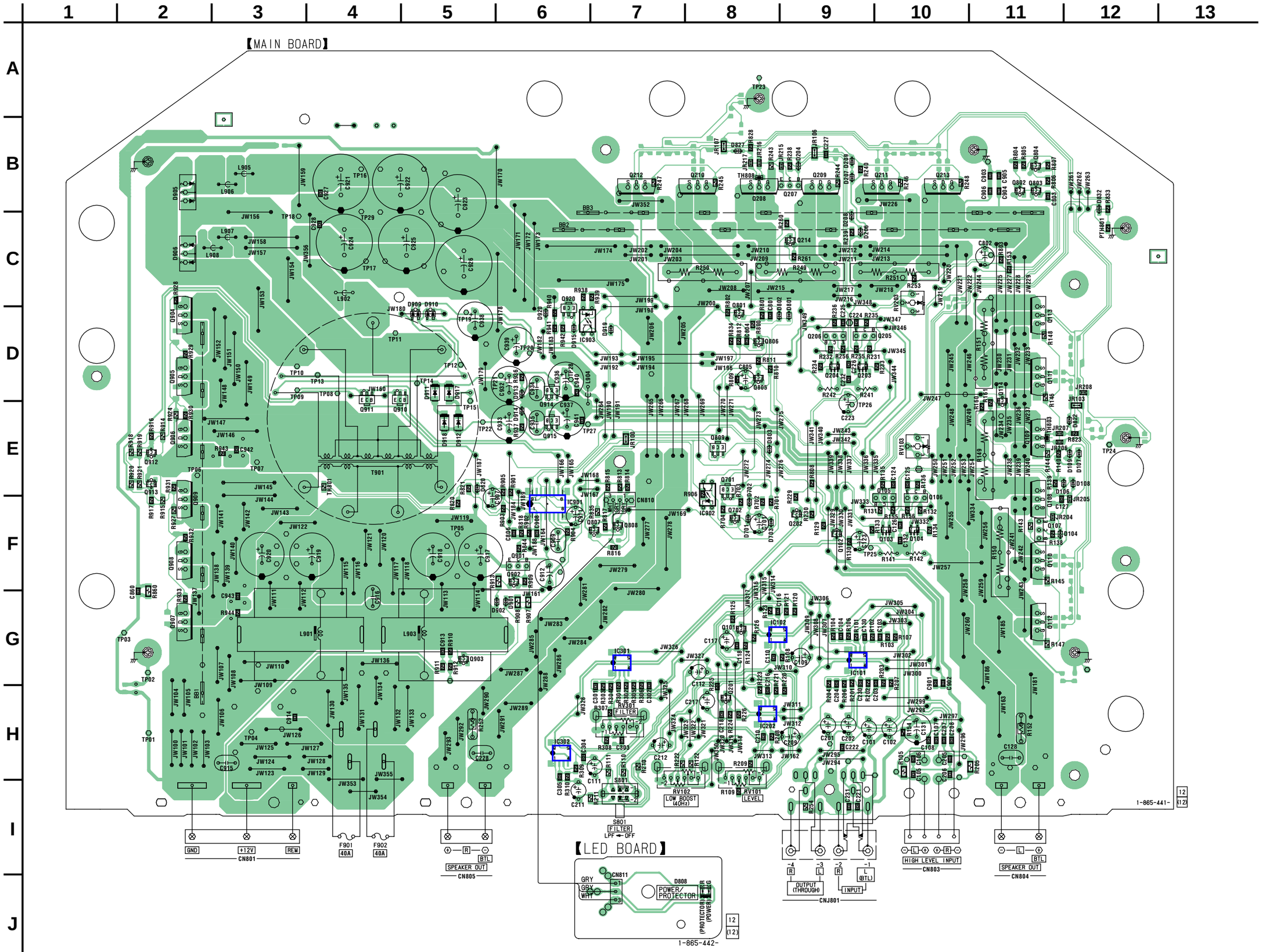

2. SCHEMATIC DIAGRAM — MAIN SECTION (1/2) — • Refer to page 2 for IC Block Diagram.

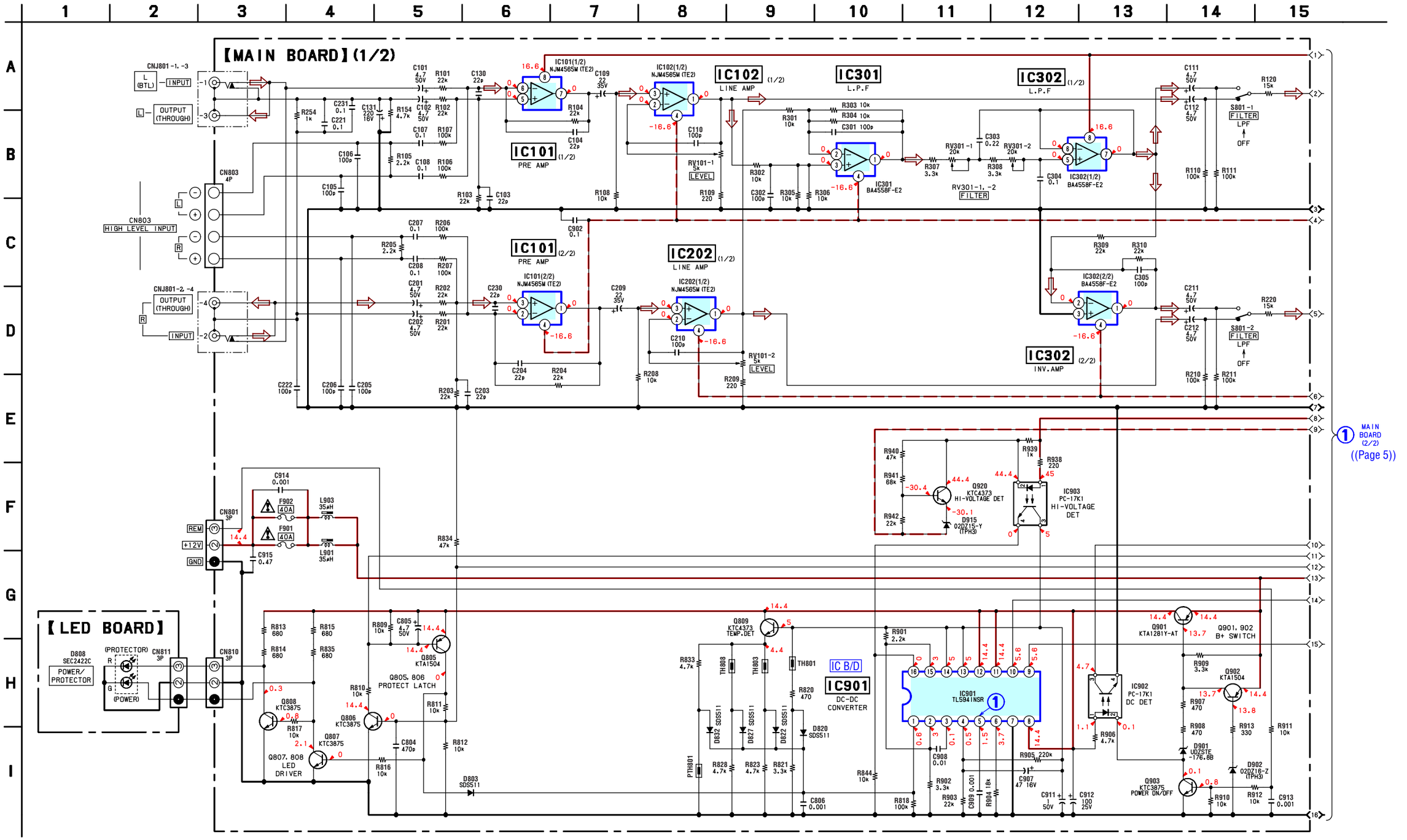

• Waveform

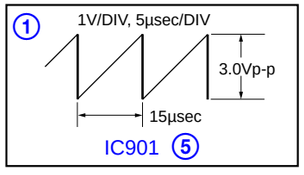

3. SCHEMATIC DIAGRAM — MAIN SECTION (2/2) —

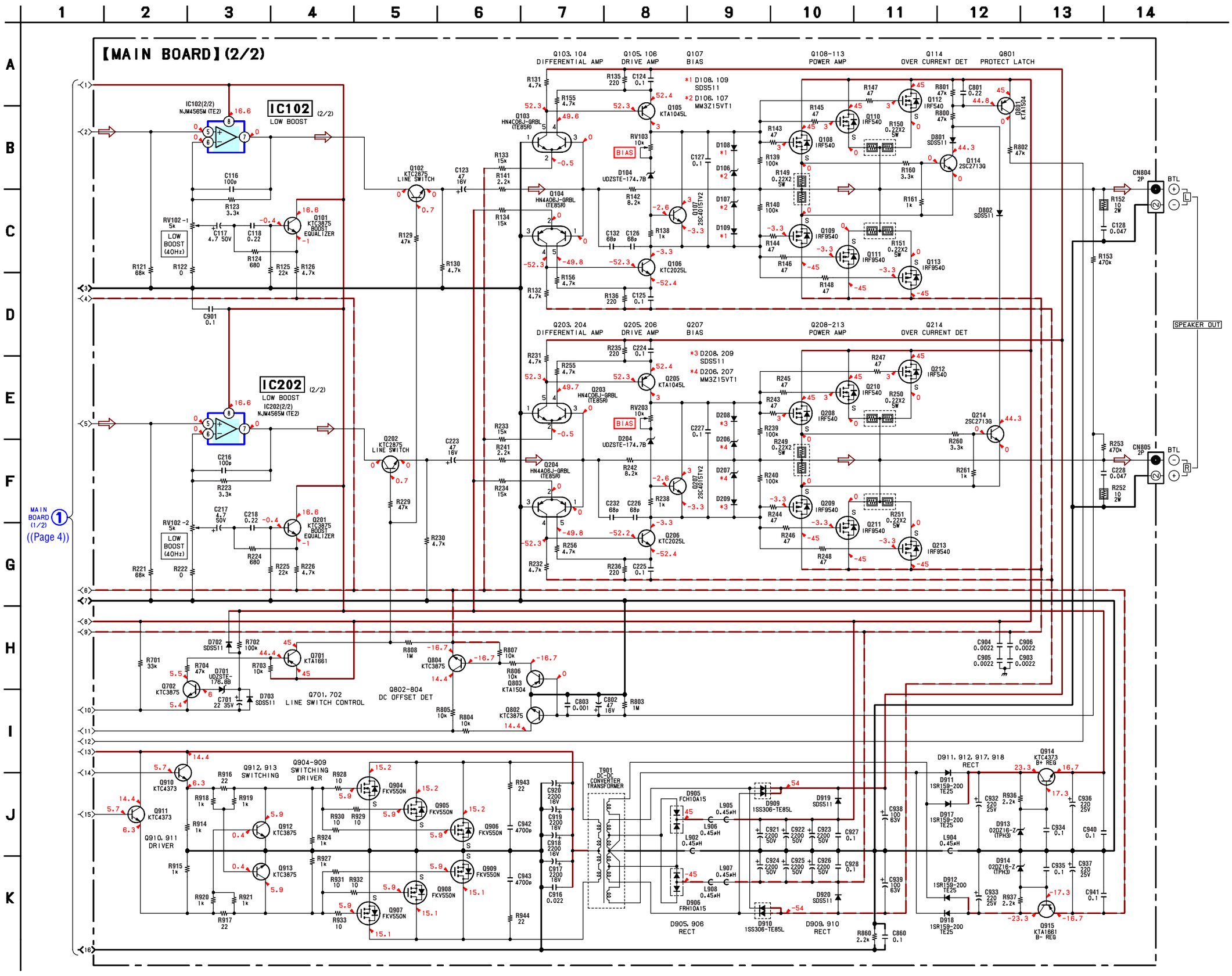

LED MAIN

4. ELECTRICAL PARTS LIST

NOTE:
- Due to standardization, replacements in the parts list may be different from the parts specified in the diagrams or the components used on the set.
- RESISTORS
  All resistors are in ohms.
  METAL:Metal-film resistor.
  METAL OXIDE: Metal oxide-film resistor.
  F:nonflammable
- Items marked "*" are not stocked since they are seldom required for routine service. Some delay should be anticipated when ordering these items.
- SEMICONDUCTORS
  In each case, u : µ, for example:
  uA.. : µA.. uPA.. : µPA..
  uPB.. : µPB.. uPC.. : µPC.. uPD.. : µPD..
- CAPACITORS
  uF : µF
- COILS
  uH : µH

The components identified by mark ⚠ or dotted line with mark ⚠ are critical for safety.
Replace only with part number specified.

Les composants identifiés par une marque ⚠ sont critiques pour la sécurité.
Ne les remplacer que par une piéce portant le numéro spécifié.

When indicating parts by reference number, please include the board.

Ref. No.	Part No.	Description	Remark
		LED BOARD	
		**********	
		< DIODE >	
D808	8-719-045-51	LED SEC2422C (POWER/PROTECTOR)	
**********			
	A-3283-470-A	MAIN BOARD, COMPLETE	
		**********	
	3-225-183-12	SCREW (+PSW.TT.3XL)	
	3-225-183-32	SCREW (+PSW.TT.3XL)	
	3-225-184-12	SCREW (+PS.TT.3XL)	
	3-238-413-01	SHEET (TR), INSULATING	
	3-249-786-01	HEAT SINK (SUB POWER)	
	3-253-537-01	SCREW (M5X11)	
	3-912-431-01	SCREW (+–P)	
	3-912-432-01	SCREW (+–B)	
	7-685-646-79	SCREW +P 3X8 TYPE2 NON-SLIT	
		< CAPACITOR >	
C101	1-126-794-11	ELECT 4.7uF 20% 50V	
C102	1-126-794-11	ELECT 4.7uF 20% 50V	
C103	1-162-919-11	CERAMIC CHIP 22PF 5% 50V	
C104	1-162-919-11	CERAMIC CHIP 22PF 5% 50V	
C105	1-163-251-11	CERAMIC CHIP 100PF 5% 50V	
C106	1-163-251-11	CERAMIC CHIP 100PF 5% 50V	
C107	1-107-826-11	CERAMIC CHIP 0.1uF 10% 16V	
C108	1-107-826-11	CERAMIC CHIP 0.1uF 10% 16V	
C109	1-126-796-11	ELECT 22uF 20% 50V	
C110	1-162-927-11	CERAMIC CHIP 100PF 5% 50V	
C111	1-126-794-11	ELECT 4.7uF 20% 50V	
C112	1-126-794-11	ELECT 4.7uF 20% 50V	
C116	1-162-927-11	CERAMIC CHIP 100PF 5% 50V	
C117	1-126-794-11	ELECT 4.7uF 20% 50V	
C118	1-127-715-11	CERAMIC CHIP 0.22uF 10% 16V	
C123	1-126-786-11	ELECT 47uF 20% 16V	
C124	1-107-826-11	CERAMIC CHIP 0.1uF 10% 16V	
C125	1-107-826-11	CERAMIC CHIP 0.1uF 10% 16V	
C126	1-162-925-11	CERAMIC CHIP 68PF 5% 50V	
C127	1-107-826-11	CERAMIC CHIP 0.1uF 10% 16V	
C128	1-137-374-11	MYLAR 0.047uF 5% 50V	
C130	1-162-919-11	CERAMIC CHIP 22PF 5% 50V	
C131	1-128-499-11	ELECT 220uF 20% 16V	
C132	1-162-925-11	CERAMIC CHIP 68PF 5% 50V	
C201	1-126-794-11	ELECT 4.7uF 20% 50V	
C202	1-126-794-11	ELECT 4.7uF 20% 50V	
C203	1-162-919-11	CERAMIC CHIP 22PF 5% 50V	
C204	1-162-919-11	CERAMIC CHIP 22PF 5% 50V	
C205	1-163-251-11	CERAMIC CHIP 100PF 5% 50V	
C206	1-163-251-11	CERAMIC CHIP 100PF 5% 50V	
C207	1-107-826-11	CERAMIC CHIP 0.1uF 10% 16V	
C208	1-107-826-11	CERAMIC CHIP 0.1uF 10% 16V	
C209	1-126-796-11	ELECT 22uF 20% 50V	
C210	1-162-927-11	CERAMIC CHIP 100PF 5% 50V	
C211	1-126-794-11	ELECT 4.7uF 20% 50V	
C212	1-126-794-11	ELECT 4.7uF 20% 50V	
C216	1-162-927-11	CERAMIC CHIP 100PF 5% 50V	
C217	1-126-794-11	ELECT 4.7uF 20% 50V	
C218	1-127-715-11	CERAMIC CHIP 0.22uF 10% 16V	
C221	1-115-339-11	CERAMIC CHIP 0.1uF 10% 50V	
C222	1-162-927-11	CERAMIC CHIP 100PF 5% 50V	
C223	1-126-786-11	ELECT 47uF 20% 16V	
C224	1-107-826-11	CERAMIC CHIP 0.1uF 10% 16V	
C225	1-107-826-11	CERAMIC CHIP 0.1uF 10% 16V	
C226	1-162-925-11	CERAMIC CHIP 68PF 5% 50V	
C227	1-107-826-11	CERAMIC CHIP 0.1uF 10% 16V	
C228	1-137-374-11	MYLAR 0.047uF 5% 50V	
C230	1-162-919-11	CERAMIC CHIP 22PF 5% 50V	
C231	1-115-339-11	CERAMIC CHIP 0.1uF 10% 50V	
C232	1-162-925-11	CERAMIC CHIP 68PF 5% 50V	
C301	1-162-927-11	CERAMIC CHIP 100PF 5% 50V	
C302	1-162-927-11	CERAMIC CHIP 100PF 5% 50V	
C303	1-127-715-11	CERAMIC CHIP 0.22uF 10% 16V	
C304	1-107-826-11	CERAMIC CHIP 0.1uF 10% 16V	
C305	1-162-927-11	CERAMIC CHIP 100PF 5% 50V	
C701	1-126-796-11	ELECT 22uF 20% 50V	
C801	1-127-715-11	CERAMIC CHIP 0.22uF 10% 16V	
C802	1-126-786-11	ELECT 47uF 20% 16V	
C803	1-162-964-11	CERAMIC CHIP 0.001uF 10% 50V	
C804	1-162-962-11	CERAMIC CHIP 470PF 10% 50V	
C805	1-126-794-11	ELECT 4.7uF 20% 50V	
C806	1-162-964-11	CERAMIC CHIP 0.001uF 10% 50V	
C860	1-107-826-11	CERAMIC CHIP 0.1uF 10% 16V	
C901	1-115-339-11	CERAMIC CHIP 0.1uF 10% 50V	
C902	1-115-339-11	CERAMIC CHIP 0.1uF 10% 50V	
C903	1-164-161-11	CERAMIC CHIP 0.0022uF 10% 50V	
C904	1-164-161-11	CERAMIC CHIP 0.0022uF 10% 50V	
C905	1-164-161-11	CERAMIC CHIP 0.0022uF 10% 50V	
C906	1-164-161-11	CERAMIC CHIP 0.0022uF 10% 50V	
C907	1-126-786-11	ELECT 47uF 20% 16V	

MAIN

Ref. No.	Part No.	Description	Remark
C908	1-162-970-11	CERAMIC CHIP 0.01uF 10% 25V	
C909	1-130-471-00	MYLAR 0.001uF 5% 50V	
C911	1-126-960-11	ELECT 1uF 20% 50V	
C912	1-128-126-11	ELECT 100uF 20% 25V	
C913	1-162-964-11	CERAMIC CHIP 0.001uF 10% 50V	
C914	1-162-964-11	CERAMIC CHIP 0.001uF 10% 50V	
C915	1-137-194-81	FILM 0.47uF 5% 50V	
C916	1-137-372-11	MYLAR 0.022uF 5% 50V	
C917	1-128-951-21	ELECT 2200uF 20% 16V	
C918	1-128-951-21	ELECT 2200uF 20% 16V	
C919	1-128-951-21	ELECT 2200uF 20% 16V	
C920	1-128-951-21	ELECT 2200uF 20% 16V	
C921	1-100-199-31	ELECT 2200uF 20% 50V	
C922	1-100-199-31	ELECT 2200uF 20% 50V	
C923	1-100-199-31	ELECT 2200uF 20% 50V	
C924	1-100-199-31	ELECT 2200uF 20% 50V	
C925	1-100-199-31	ELECT 2200uF 20% 50V	
C926	1-100-199-31	ELECT 2200uF 20% 50V	
C927	1-115-339-11	CERAMIC CHIP 0.1uF 10% 50V	
C928	1-115-339-11	CERAMIC CHIP 0.1uF 10% 50V	
C932	1-104-666-11	ELECT 220uF 20% 25V	
C933	1-104-666-11	ELECT 220uF 20% 25V	
C934	1-130-495-00	MYLAR 0.1uF 5% 50V	
C935	1-130-495-00	MYLAR 0.1uF 5% 50V	
C936	1-104-666-11	ELECT 220uF 20% 25V	
C937	1-104-666-11	ELECT 220uF 20% 25V	
C938	1-128-576-11	ELECT 100uF 20% 63V	
C939	1-128-576-11	ELECT 100uF 20% 63V	
C940	1-115-339-11	CERAMIC CHIP 0.1uF 10% 50V	
C941	1-115-339-11	CERAMIC CHIP 0.1uF 10% 50V	
C942	1-162-968-11	CERAMIC CHIP 0.0047uF 10% 50V	
C943	1-162-968-11	CERAMIC CHIP 0.0047uF 10% 50V	
		< TERMINAL BOARD >	
CN801	1-694-983-11	TERMINAL BOARD (3P+FUSE) (REM,+12V,GND,40A,40A)	
CN804	1-694-984-11	TERMINAL BOARD (SPEAKER OUT (L))	
CN805	1-694-984-11	TERMINAL BOARD (SPEAKER OUT (R))	
		< CONNECTOR >	
* CN803	1-691-785-11	PIN, CONNECTOR (PC BOARD) 4P (HIGH LEVEL INPUT)	
CN810	1-506-468-11	PIN, CONNECTOR 3P	
		< JACK >	
CNJ801	1-779-078-41	JACK, PIN 4P (INPUT,OUTPUT (THROUGH))	
		< DIODE >	
D104	8-719-083-60	DIODE UDZSTE-174.7B	
D106	8-719-082-03	DIODE MM3Z15VT1	
D107	8-719-082-03	DIODE MM3Z15VT1	
D108	8-719-080-34	DIODE SDS511	
D109	8-719-080-34	DIODE SDS511	
D204	8-719-083-60	DIODE UDZSTE-174.7B	
D206	8-719-082-03	DIODE MM3Z15VT1	
D207	8-719-082-03	DIODE MM3Z15VT1	
D208	8-719-080-34	DIODE SDS511	
D209	8-719-080-34	DIODE SDS511	
D701	8-719-978-33	DIODE DTZ-TT11-6.8B	
D702	8-719-080-34	DIODE SDS511	
D703	8-719-080-34	DIODE SDS511	
D801	8-719-080-34	DIODE SDS511	
D802	8-719-080-34	DIODE SDS511	
D803	8-719-080-34	DIODE SDS511	
D820	8-719-080-34	DIODE SDS511	
D822	8-719-080-34	DIODE SDS511	
D827	8-719-080-34	DIODE SDS511	
D832	8-719-080-34	DIODE SDS511	
D901	8-719-978-33	DIODE DTZ-TT11-6.8B	
D902	8-719-065-46	DIODE 02DZ16-Z(TPH3)	
D905	8-719-079-00	DIODE FCH10A15	
D906	8-719-079-01	DIODE FRH10A15	
D909	8-719-054-55	DIODE 1SS306-TE85L	
D910	8-719-054-55	DIODE 1SS306-TE85L	
D911	8-719-079-92	DIODE 1SR159-200TE25	
D912	8-719-079-92	DIODE 1SR159-200TE25	
D913	8-719-065-46	DIODE 02DZ16-Z(TPH3)	
D914	8-719-065-46	DIODE 02DZ16-Z(TPH3)	
D915	8-719-065-42	DIODE 02DZ15-Y(TPH3)	
D917	8-719-079-92	DIODE 1SR159-200TE25	
D918	8-719-079-92	DIODE 1SR159-200TE25	
D919	8-719-080-34	DIODE SDS511	
D920	8-719-080-34	DIODE SDS511	
		< FUSE >	
⚠F901	1-533-743-11	FUSE (BLADE TYPE) (AUTO FUSE) (40A)	
⚠F902	1-533-743-11	FUSE (BLADE TYPE) (AUTO FUSE) (40A)	
		< IC >	
IC101	8-759-710-97	IC NJM4565M-D	
IC102	8-759-710-97	IC NJM4565M-D	
IC202	8-759-710-97	IC NJM4565M-D	
IC301	8-759-909-71	IC BA4558F	
IC302	8-759-909-71	IC BA4558F	
IC901	6-703-643-01	IC TL594INSR	
		< PHOTO TRANSISTOR >	
IC902	6-600-354-01	PHOTO TRANSISTOR PC-17K1	
IC903	6-600-354-01	PHOTO TRANSISTOR PC-17K1	
		< JUMPER RESISTOR >	
JR100	1-216-296-11	SHORT CHIP 0	
JR103	1-216-296-11	SHORT CHIP 0	
JR106	1-216-296-11	SHORT CHIP 0	
JR107	1-216-296-11	SHORT CHIP 0	
JR204	1-216-295-11	SHORT CHIP 0	
JR205	1-216-295-11	SHORT CHIP 0	
JR206	1-216-295-11	SHORT CHIP 0	
JR207	1-216-295-11	SHORT CHIP 0	
JR208	1-216-295-11	SHORT CHIP 0	
JR215	1-216-295-11	SHORT CHIP 0	
JR216	1-216-295-11	SHORT CHIP 0	
JR217	1-216-295-11	SHORT CHIP 0	

Ref. No.	Part No.	Description	Remark
		< COIL >	
L901	1-456-139-12	INDUCTOR 35uH	
L902	1-410-396-71	FERRITE 0.45uH	
L903	1-456-139-12	INDUCTOR 35uH	
L904	1-410-396-71	FERRITE 0.45uH	
L905	1-410-396-71	FERRITE 0.45uH	
L906	1-410-396-71	FERRITE 0.45uH	
L907	1-410-396-71	FERRITE 0.45uH	
L908	1-410-396-71	FERRITE 0.45uH	
		< THERMISTOR (POSITIVE) >	
PTH801	1-805-163-21	THERMISTOR, POSITIVE	
		< TRANSISTOR >	
Q101	8-729-034-51	TRANSISTOR KTC3875	
Q102	6-550-686-01	TRANSISTOR KTC2875-B-RTK	
Q103	6-550-031-01	TRANSISTOR HN4C06J-GRBL(TE85R)	
Q104	6-550-032-01	TRANSISTOR HN4A06J-GRBL(TE85R)	
Q105	6-550-691-01	TRANSISTOR KTA1045L-Y	
Q106	6-550-692-01	TRANSISTOR KTC2025L-Y	
Q107	8-729-041-66	TRANSISTOR 2SC4015TV2	
Q108	X-3383-027-1	FET PAIR ASSY (N) (IRF540) (set of 3)	
Q109	X-3383-028-1	FET PAIR ASSY (P) (IRF9540) (set of 3)	
Q110	X-3383-027-1	FET PAIR ASSY (N) (IRF540) (set of 3)	
Q111	X-3383-028-1	FET PAIR ASSY (P) (IRF9540) (set of 3)	
Q112	X-3383-027-1	FET PAIR ASSY (N) (IRF540) (set of 3)	
Q113	X-3383-028-1	FET PAIR ASSY (P) (IRF9540) (set of 3)	
Q114	8-729-271-31	TRANSISTOR 2SC2713-G	
Q201	8-729-034-51	TRANSISTOR KTC3875	
Q202	6-550-686-01	TRANSISTOR KTC2875-B-RTK	
Q203	6-550-031-01	TRANSISTOR HN4C06J-GRBL(TE85R)	
Q204	6-550-032-01	TRANSISTOR HN4A06J-GRBL(TE85R)	
Q205	6-550-691-01	TRANSISTOR KTA1045L-Y	
Q206	6-550-692-01	TRANSISTOR KTC2025L-Y	
Q207	8-729-041-66	TRANSISTOR 2SC4015TV2	
Q208	X-3383-027-1	FET PAIR ASSY (N) (IRF540) (set of 3)	
Q209	X-3383-028-1	FET PAIR ASSY (P) (IRF9540) (set of 3)	
Q210	X-3383-027-1	FET PAIR ASSY (N) (IRF540) (set of 3)	
Q211	X-3383-028-1	FET PAIR ASSY (P) (IRF9540) (set of 3)	
Q212	X-3383-027-1	FET PAIR ASSY (N) (IRF540) (set of 3)	
Q213	X-3383-028-1	FET PAIR ASSY (P) (IRF9540) (set of 3)	
Q214	8-729-271-31	TRANSISTOR 2SC2713-G	
Q701	6-550-690-01	TRANSISTOR KTA1661	
Q702	8-729-034-51	TRANSISTOR KTC3875	
Q801	8-729-034-50	TRANSISTOR KTA1504	
Q802	8-729-034-51	TRANSISTOR KTC3875	
Q803	8-729-034-50	TRANSISTOR KTA1504	
Q804	8-729-034-51	TRANSISTOR KTC3875	
Q805	8-729-034-50	TRANSISTOR KTA1504	
Q806	8-729-034-51	TRANSISTOR KTC3875	
Q807	8-729-034-51	TRANSISTOR KTC3875	
Q808	8-729-034-51	TRANSISTOR KTC3875	
Q809	6-550-693-01	TRANSISTOR KTC4373	
Q901	8-729-052-82	TRANSISTOR KTA1281Y-AT	
Q902	8-729-034-50	TRANSISTOR KTA1504	
Q903	8-729-034-51	TRANSISTOR KTC3875	
Q904	6-550-341-01	FET FKV550N	
Q905	6-550-341-01	FET FKV550N	
Q906	6-550-341-01	FET FKV550N	
Q907	6-550-341-01	FET FKV550N	
Q908	6-550-341-01	FET FKV550N	
Q909	6-550-341-01	FET FKV550N	
Q910	6-550-693-01	TRANSISTOR KTC4373	
Q911	6-550-693-01	TRANSISTOR KTC4373	
Q912	8-729-034-51	TRANSISTOR KTC3875	
Q913	8-729-034-51	TRANSISTOR KTC3875	
Q914	6-550-693-01	TRANSISTOR KTC4373	
Q915	6-550-690-01	TRANSISTOR KTA1661	
Q920	6-550-693-01	TRANSISTOR KTC4373	
		< RESISTOR >	
R101	1-216-837-11	METAL CHIP 22K 5% 1/10W	
R102	1-216-837-11	METAL CHIP 22K 5% 1/10W	
R103	1-216-837-11	METAL CHIP 22K 5% 1/10W	
R104	1-216-837-11	METAL CHIP 22K 5% 1/10W	
R105	1-216-206-00	RES-CHIP 2.2K 5% 1/8W	
R106	1-216-845-11	METAL CHIP 100K 5% 1/10W	
R107	1-216-845-11	METAL CHIP 100K 5% 1/10W	
R108	1-216-833-11	METAL CHIP 10K 5% 1/10W	
R109	1-216-033-00	RES-CHIP 220 5% 1/10W	
R110	1-216-845-11	METAL CHIP 100K 5% 1/10W	
R111	1-216-845-11	METAL CHIP 100K 5% 1/10W	
R120	1-216-077-11	RES-CHIP 15K 5% 1/10W	
R121	1-216-843-11	METAL CHIP 68K 5% 1/10W	
R122	1-216-295-11	SHORT CHIP 0	
R123	1-216-827-11	METAL CHIP 3.3K 5% 1/10W	
R124	1-216-045-00	RES-CHIP 680 5% 1/10W	
R125	1-216-837-11	METAL CHIP 22K 5% 1/10W	
R126	1-216-829-11	METAL CHIP 4.7K 5% 1/10W	
R129	1-216-841-11	METAL CHIP 47K 5% 1/10W	
R130	1-216-829-11	METAL CHIP 4.7K 5% 1/10W	
R131	1-216-829-11	METAL CHIP 4.7K 5% 1/10W	
R132	1-216-829-11	METAL CHIP 4.7K 5% 1/10W	
R133	1-216-077-11	RES-CHIP 15K 5% 1/10W	
R134	1-216-077-11	RES-CHIP 15K 5% 1/10W	
R135	1-216-033-00	RES-CHIP 220 5% 1/10W	
R136	1-216-033-00	RES-CHIP 220 5% 1/10W	
R138	1-216-821-11	METAL CHIP 1K 5% 1/10W	
R139	1-216-845-11	METAL CHIP 100K 5% 1/10W	
R140	1-216-845-11	METAL CHIP 100K 5% 1/10W	
R141	1-249-421-11	CARBON 2.2K 5% 1/4W	
R142	1-249-428-11	CARBON 8.2K 5% 1/4W	
R143	1-216-017-11	RES-CHIP 47 5% 1/10W	
R144	1-216-017-11	RES-CHIP 47 5% 1/10W	
R145	1-216-017-11	RES-CHIP 47 5% 1/10W	
R146	1-216-017-11	RES-CHIP 47 5% 1/10W	
R147	1-216-017-11	RES-CHIP 47 5% 1/10W	
R148	1-216-017-11	RES-CHIP 47 5% 1/10W	
R149	1-234-499-11	ENCAPSULATED COMPONENT 0.22X2 5W	
R150	1-234-499-11	ENCAPSULATED COMPONENT 0.22X2 5W	
R151	1-234-499-11	ENCAPSULATED COMPONENT 0.22X2 5W	
R152	1-215-880-31	METAL OXIDE 10 5% 2W	F
R153	1-216-853-11	METAL CHIP 470K 5% 1/10W	
R154	1-216-065-11	RES-CHIP 4.7K 5% 1/10W	
R155	1-216-829-11	METAL CHIP 4.7K 5% 1/10W	

MAIN

Ref. No.	Part No.	Description			Remark
R156	1-216-829-11	METAL CHIP	4.7K	5%	1/10W
R160	1-216-827-11	METAL CHIP	3.3K	5%	1/10W
R161	1-216-821-11	METAL CHIP	1K	5%	1/10W
R201	1-216-837-11	METAL CHIP	22K	5%	1/10W
R202	1-216-837-11	METAL CHIP	22K	5%	1/10W
R203	1-216-837-11	METAL CHIP	22K	5%	1/10W
R204	1-216-837-11	METAL CHIP	22K	5%	1/10W
R205	1-216-206-00	RES-CHIP	2.2K	5%	1/8W
R206	1-216-845-11	METAL CHIP	100K	5%	1/10W
R207	1-216-845-11	METAL CHIP	100K	5%	1/10W
R208	1-216-833-11	METAL CHIP	10K	5%	1/10W
R209	1-216-033-00	RES-CHIP	220	5%	1/10W
R210	1-216-845-11	METAL CHIP	100K	5%	1/10W
R211	1-216-845-11	METAL CHIP	100K	5%	1/10W
R220	1-216-077-11	RES-CHIP	15K	5%	1/10W
R221	1-216-843-11	METAL CHIP	68K	5%	1/10W
R222	1-216-295-11	SHORT CHIP	0		
R223	1-216-827-11	METAL CHIP	3.3K	5%	1/10W
R224	1-216-045-00	RES-CHIP	680	5%	1/10W
R225	1-216-837-11	METAL CHIP	22K	5%	1/10W
R226	1-216-829-11	METAL CHIP	4.7K	5%	1/10W
R229	1-216-841-11	METAL CHIP	47K	5%	1/10W
R230	1-216-829-11	METAL CHIP	4.7K	5%	1/10W
R231	1-216-829-11	METAL CHIP	4.7K	5%	1/10W
R232	1-216-829-11	METAL CHIP	4.7K	5%	1/10W
R233	1-216-077-11	RES-CHIP	15K	5%	1/10W
R234	1-216-077-11	RES-CHIP	15K	5%	1/10W
R235	1-216-033-00	RES-CHIP	220	5%	1/10W
R236	1-216-033-00	RES-CHIP	220	5%	1/10W
R238	1-216-821-11	METAL CHIP	1K	5%	1/10W
R239	1-216-845-11	METAL CHIP	100K	5%	1/10W
R240	1-216-845-11	METAL CHIP	100K	5%	1/10W
R241	1-249-421-11	CARBON	2.2K	5%	1/4W
R242	1-249-428-11	CARBON	8.2K	5%	1/4W
R243	1-216-017-11	RES-CHIP	47	5%	1/10W
R244	1-216-017-11	RES-CHIP	47	5%	1/10W
R245	1-216-017-11	RES-CHIP	47	5%	1/10W
R246	1-216-017-11	RES-CHIP	47	5%	1/10W
R247	1-216-017-11	RES-CHIP	47	5%	1/10W
R248	1-216-017-11	RES-CHIP	47	5%	1/10W
R249	1-234-499-11	ENCAPSULATED COMPONENT 0.22X2 5W			
R250	1-234-499-11	ENCAPSULATED COMPONENT 0.22X2 5W			
R251	1-234-499-11	ENCAPSULATED COMPONENT 0.22X2 5W			
R252	1-215-880-31	METAL OXIDE	10	5%	2W F
R253	1-216-853-11	METAL CHIP	470K	5%	1/10W
R254	1-216-049-11	RES-CHIP	1K	5%	1/10W
R255	1-216-829-11	METAL CHIP	4.7K	5%	1/10W
R256	1-216-829-11	METAL CHIP	4.7K	5%	1/10W
R260	1-216-827-11	METAL CHIP	3.3K	5%	1/10W
R261	1-216-821-11	METAL CHIP	1K	5%	1/10W
R301	1-216-833-11	METAL CHIP	10K	5%	1/10W
R302	1-216-833-11	METAL CHIP	10K	5%	1/10W
R303	1-216-833-11	METAL CHIP	10K	5%	1/10W
R304	1-216-833-11	METAL CHIP	10K	5%	1/10W
R305	1-216-833-11	METAL CHIP	10K	5%	1/10W
R306	1-216-833-11	METAL CHIP	10K	5%	1/10W
R307	1-216-827-11	METAL CHIP	3.3K	5%	1/10W
R308	1-216-827-11	METAL CHIP	3.3K	5%	1/10W
R309	1-216-837-11	METAL CHIP	22K	5%	1/10W
R310	1-216-837-11	METAL CHIP	22K	5%	1/10W
R701	1-216-839-11	METAL CHIP	33K	5%	1/10W
R702	1-216-845-11	METAL CHIP	100K	5%	1/10W
R703	1-216-833-11	METAL CHIP	10K	5%	1/10W
R704	1-216-841-11	METAL CHIP	47K	5%	1/10W
R800	1-216-841-11	METAL CHIP	47K	5%	1/10W
R801	1-216-841-11	METAL CHIP	47K	5%	1/10W
R802	1-216-841-11	METAL CHIP	47K	5%	1/10W
R803	1-216-857-11	METAL CHIP	1M	5%	1/10W
R804	1-216-833-11	METAL CHIP	10K	5%	1/10W
R805	1-216-833-11	METAL CHIP	10K	5%	1/10W
R806	1-216-833-11	METAL CHIP	10K	5%	1/10W
R807	1-216-833-11	METAL CHIP	10K	5%	1/10W
R808	1-216-857-11	METAL CHIP	1M	5%	1/10W
R809	1-216-833-11	METAL CHIP	10K	5%	1/10W
R810	1-216-833-11	METAL CHIP	10K	5%	1/10W
R811	1-216-833-11	METAL CHIP	10K	5%	1/10W
R812	1-216-833-11	METAL CHIP	10K	5%	1/10W
R813	1-216-045-00	RES-CHIP	680	5%	1/10W
R814	1-216-045-00	RES-CHIP	680	5%	1/10W
R815	1-216-045-00	RES-CHIP	680	5%	1/10W
R816	1-216-833-11	METAL CHIP	10K	5%	1/10W
R817	1-216-833-11	METAL CHIP	10K	5%	1/10W
R818	1-216-845-11	METAL CHIP	100K	5%	1/10W
R820	1-216-817-11	METAL CHIP	470	5%	1/10W
R821	1-216-827-11	METAL CHIP	3.3K	5%	1/10W
R823	1-216-829-11	METAL CHIP	4.7K	5%	1/10W
R828	1-216-829-11	METAL CHIP	4.7K	5%	1/10W
R833	1-216-829-11	METAL CHIP	4.7K	5%	1/10W
R834	1-216-841-11	METAL CHIP	47K	5%	1/10W
R835	1-216-045-00	RES-CHIP	680	5%	1/10W
R844	1-216-833-11	METAL CHIP	10K	5%	1/10W
R860	1-216-206-00	RES-CHIP	2.2K	5%	1/8W
R901	1-216-825-11	METAL CHIP	2.2K	5%	1/10W
R902	1-216-827-11	METAL CHIP	3.3K	5%	1/10W
R903	1-216-837-11	METAL CHIP	22K	5%	1/10W
R904	1-216-836-11	METAL CHIP	18K	5%	1/10W
R905	1-216-849-11	METAL CHIP	220K	5%	1/10W
R906	1-216-065-11	RES-CHIP	4.7K	5%	1/10W
R907	1-216-190-00	RES-CHIP	470	5%	1/8W
R908	1-216-190-00	RES-CHIP	470	5%	1/8W
R909	1-216-061-11	RES-CHIP	3.3K	5%	1/10W
R910	1-216-073-00	RES-CHIP	10K	5%	1/10W
R911	1-216-073-00	RES-CHIP	10K	5%	1/10W
R912	1-216-073-00	RES-CHIP	10K	5%	1/10W
R913	1-216-186-00	RES-CHIP	330	5%	1/8W
R914	1-216-049-11	RES-CHIP	1K	5%	1/10W
R915	1-216-049-11	RES-CHIP	1K	5%	1/10W
R916	1-216-009-11	RES-CHIP	22	5%	1/10W
R917	1-216-009-11	RES-CHIP	22	5%	1/10W
R918	1-216-049-11	RES-CHIP	1K	5%	1/10W
R919	1-216-049-11	RES-CHIP	1K	5%	1/10W
R920	1-216-049-11	RES-CHIP	1K	5%	1/10W
R921	1-216-049-11	RES-CHIP	1K	5%	1/10W
R924	1-216-049-11	RES-CHIP	1K	5%	1/10W
R927	1-216-049-11	RES-CHIP	1K	5%	1/10W
R928	1-216-001-00	RES-CHIP	10	5%	1/10W

Ref. No.	Part No.	Description			Remark
R929	1-216-001-00	RES-CHIP	10	5%	1/10W
R930	1-216-001-00	RES-CHIP	10	5%	1/10W
R931	1-216-001-00	RES-CHIP	10	5%	1/10W
R932	1-216-001-00	RES-CHIP	10	5%	1/10W
R933	1-216-001-00	RES-CHIP	10	5%	1/10W
R936	1-216-825-11	METAL CHIP	2.2K	5%	1/10W
R937	1-216-825-11	METAL CHIP	2.2K	5%	1/10W
R938	1-216-033-00	RES-CHIP	220	5%	1/10W
R939	1-216-821-11	METAL CHIP	1K	5%	1/10W
R940	1-216-089-11	RES-CHIP	47K	5%	1/10W
R941	1-216-843-11	METAL CHIP	68K	5%	1/10W
R942	1-216-837-11	METAL CHIP	22K	5%	1/10W
R943	1-216-009-11	RES-CHIP	22	5%	1/10W
R944	1-216-009-11	RES-CHIP	22	5%	1/10W
		< VARIABLE RESISTOR >			
RV101	1-227-558-11	RES, VAR, CABON 5KX2 (LEVEL)			
RV102	1-227-558-11	RES, VAR, CABON 5KX2 (LOW BOOST (40Hz))			
RV301	1-227-557-11	RES, VAR, CABON 20KX2 (FILTER)			
		< CERMET RESISTOR >			
RV103	1-241-764-11	RES, ADJ, CERMET 10K			
RV203	1-241-764-11	RES, ADJ, CERMET 10K			
		< SWITCH >			
S801	1-692-990-21	SWITCH, SLIDE (FILTER)			
		< TRANSFORMER >			
T901	1-439-635-21	TRANSFORMER, DC-DC CONVERTER			
		< THERMISTOR (NEGATIVE) >			
TH801	1-804-301-11	THERMISTOR, CHIP			
TH803	1-804-301-11	THERMISTOR, CHIP			
TH808	1-804-301-11	THERMISTOR, CHIP			

REVISION HISTORY

Clicking the version allows you to jump to the revised page.
Also, clicking the version at the upper on the revised page allows you to jump to the next revised page.

Ver.	Date	Description of Revision
1.0	2003.11	New
1.1	2004.12	Correction of R142, 242 (6.8k ⟶ 8.2k) (ENG-04009)
1.2	2005.02	Part number correction of Q108 to 113 and Q208 to 213. (ENG-05002)
1.3	2005.05	Change the MAIN and LED boards. (ECN-ECA96750)